300CB08/nrg300CB08/nrgILS300CB08

Installation Guide



Applies To:

- 300CB08
- 300CB08-C
- 300CB08-SC
- nrg300CB08-CTRL
- nrg300CB08-CTRL-C
- nrg300CB08-CTRL-SC
- nrg300CB08-SENS
- nrg300CB08-SENS-C
- nrg300CB08-SENS-SC
- nrgILS300CB08
- nrgILS300CB08-C

Amphenol
NETWORK SOLUTIONS™

Installation Guide, Part Number 149722-2 A9

Copyright 2022, Amphenol Network Solutions, All rights reserved.

Amphenol Network Solutions
22425 E. Appleway Ave #11
Liberty Lake, WA 99019

Amphenol Network Solutions assumes no liability from the application or use of these products. Amphenol Network Solutions does not convey any license under its patent rights nor the patent rights of others. This document and the products described herein are subject to change without notice.

About

Amphenol Network Solutions is a global innovative original equipment manufacturer that serves the data and communications markets. We design, manufacture, and distribute products for customers who need an end to end solution for network connectivity, fiber, power distribution and rack management. We collaborate with our customers to deliver product solutions that exceed expectations with innovative designs and world class quality. Amphenol Network Solutions is the industry thought leader on network cable management.



Telect, Inc. has been a market leader in secondary DC power distribution for over 36 years. Through our acquisition by Amphenol and our merger with All Systems Broadband, to become Amphenol Network Solutions, we have continued to deliver reliable, high-quality solutions to power, protect, and monitor today’s network servers and equipment. We are proud to be an Amphenol company that will continue to be Powered by Telect.

Technical Support

Email: support@amphenol-ns.com
Phone: 509.926.6000

Table of Contents

Section One: Overview 6
1.1 About this Guide 6
1.2 nrgSMART™ 6
1.3 300CB08 Configurations 7
1.4 300CB08 Overview 7
1.5 Specifications 10
Section Two: Installation 13
2.1 Important Installation Guidelines 13
2.2 Installation Instructions 13
2.2.1 Mounting Brackets 14
2.2.2 Tie Bar Installation and Optional 4 Post Mounting Bracket (-C Versions) 14
2.2.3 Optional Tie Bar Installation (-SC Versions) 15
2.2.4 Rack Mounting 16
2.2.5 Grounding 17
2.2.6 Input Wiring 18
2.2.7 Remove Front Cover 19
2.2.8 Installing Breakers 20
2.2.9 Alarming 21
2.2.10 Blanking Cover 22
2.2.11 Alarm Terminals 23
2.2.12 nrgSMART Connectivity (-CTRL Versions) 23
2.2.13 Output Wiring (Terminal Block Versions) 25
2.2.14 Output Wiring (Connectorized Versions) 26
2.2.15 Install Rear Cover 28
2.3 Circuit Breaker Puller 30
2.3.1 Removing Circuit Breakers 30
2.4 Contact Removal Tool 30
2.5 Tie Bar (-C Versions) 31
2.6 Tie Bar with 4 Post Mounting Brackets (-C Versions) 31
2.7 Tie Bar (-SC Versions) 31
2.8 Temperature Probes (nrgSMART Versions) 32
2.9 nrgNET Pinouts (nrgSMART Versions) 33
2.9.1 nrgNET Pinouts (Legacy) 33
2.9.2 nrgNET Pinouts (Integrated Controller) 34

Amphenol Network Solutions
All rights reserved. 3.26.2025 149722-2 Rev A9
509.926.6000 — amphenol-ns.com.com

2.10 Parts & Accessories 35
2.10.1 Ordering Information 35
2.10.2 Circuit Breakers 36
2.10.3 Lug Reference Guide 37
Section Three: Drawings 38
3.1 300CB08 Drawings 38
Section Four: Notices (nrgSMART Versions) 47
4.1 FCC Class A Notice 47
4.2 ICES-003 Class A Notice – Avis NMB-003, Class A 47

List of Figures

Fig. 1-1: 300CB08 Front View (included blanking covers shown installed) 8
Fig. 1-2: nrg300CB08-CTRL Rear View 8
Fig. 1-3: nrg300CB08-SENS-C Front View 9
Fig. 1-4: 300CB08-C Rear View 9
Fig. 2-1: Installing Mounting Brackets 14
Fig. 2-2: Installing -C Tie Bar 14
Fig. 2-3: Installing Optional 4 Post Mounting Brackets 15
Fig. 2-4: Installing Optional -SC Tie Bar 15
Fig. 2-5: Installing Panel in Rack 16
Fig. 2-6: Grounding Lug Connection 17
Fig. 2-7: Input Lugs 18
Fig. 2-8: Removing the Front Cover 19
Fig. 2-9a: Installing Breaker Cover and Position Designation Label 20
Fig. 2-9b: Installing Breakers 20
Fig. 2-10: DIP Switches 21
Fig. 2-11: nrg300CB08 LED Status 21
Fig. 2-12: Blanking Cover 22
Fig. 2-13: nrg300CB08 Alarm Terminals 23
Fig. 2-14: CTRL Panel Connectivity Ports 24
Fig. 2-15: Output Lugs 25
Fig. 2-16: Insert Crimped Terminals 26
Fig. 2-17: Connector Front View 26
Fig. 2-18: Insert Retainer 26
Fig. 2-19: Insert Connector 27
Fig. 2-20: Rear Cover (Standard Versions) 28
Fig. 2-21: Rear Cover (-C Versions) 29
Fig. 2-22: Rear Cover (-SC Versions) 29
Fig. 2-23: Optional Circuit Breaker Puller PN: 307491 30

Amphenol Network Solutions
All rights reserved. 3.26.2025 149722-2 Rev A9
509.926.6000 — amphenol-ns.com.com

Fig. 2-24: Optional Contact Removal Tool PN: 150797 30
Fig. 2-25: Tie Bar (Included with -C Versions) 31
Fig. 2-26: Tie Bar with Optional 4 Post Mounting Brackets (-C Version Only) PN: 307622 31
Fig. 2-27: Optional Tie Bar (-SC Versions) PN: 307661 31
Fig. 2-28: Optional nrgTEMP Temperature Probe (nrgSMART/ILS Versions) PN: nrgTEMP/nrgILSTEMP 32
Fig. 2-29: nrgNET Pinout Connections (Legacy) 33
Fig. 2-30: nrgNET Connections (Integrated Controller) 34
Fig. 3-1: Front View (Passive Versions) 38
Fig. 3-2: Front View (nrgSMART -CTRL and nrgILS Versions) 38
Fig. 3-3: Front View (nrgSMART -SENS Versions) 38
Fig. 3-4: Side View (Standard and -SC Versions) 38
Fig. 3-5: Side View (-C Versions) 39
Fig. 3-6: Rear View (300CB08) 39
Fig. 3-7: Rear View (nrg300CB08-CTRL, nrg300CB08-SENS and nrgILS 300CB08) 39
Fig. 3-8: Rear view (300CB08-C) 40
Fig. 3-9: Rear View (nrg300CB08-CTRL-C, nrg300CB08-SENS-C and nrgILS300CB08-C) 40
Fig. 3-10: Rear View (300CB08-SC) 40
Fig. 3-11: Rear View (nrg300CB08A08-CTRL-SC and nrg300CB08A08-SENS-SC) 40
Fig. 3-12: Bottom View Standard (TOP) nrgILS300CB08 (Bottom) 41
Fig. 3-13: Bottom View -C Version (TOP) nrgILS300CB08 (Bottom) 43
Fig. 3-14: Bottom View (-SC Versions) 44
Fig. 3-15: Optional 4 Post Mounting Bracket (-C Versions) 45
Fig. 3-16: Optional Tie Bar (-SC Versions) 46

Amphenol Network Solutions
All rights reserved. 3.26.2025 149722-2 Rev A9
509.926.6000 — amphenol-ns.com.com

Section One: Overview

1.1 About this Guide

This manual provides a comprehensive overview of and installation guidelines for the 300CB08 and nrg300CB08 family of power distribution panels. While care has been taken to define all necessary information, complete details may not be covered. If you have any questions, contact Amphenol Network Solutions Technical Support at support@amphenol-ns.com or call 1-509-926-6000.

Throughout this guide, select information is highlighted in the form of Notes, Alerts, Cautions, and Warnings. These notifications are prominent, and their importance is indicated as follows:

NOTE: General information to which the user should pay special attention.

ALERT

ALERT! Important information and/or instructions to which the user should adhere.

CAUTION

CAUTION! Indicates a hazardous situation, which could result in minor or moderate injury.

WARNING

WARNING! Indicates a hazardous situation, which could result in death or serious injury.

Amphenol Network Solutions assumes no liability from the application or use of these products. Amphenol Network Solutions does not convey a license under its patent rights, nor the patent rights of others. This document and the products described herein are subject to change without notice.

1.2 nrgSMART™

nrgSMART describes the family of distributed network monitoring and management products, from BDFBs to high-current and low-current secondary panels. nrgSMART allows you to collect performance data on distributed assets and tools to help you efficiently access business critical and actionable information.

Amphenol Network Solutions recognizes the industry need to manage distributed assets more efficiently, get better power performance out of deployed assets, as well as pursue realistic and achievable alternative energy goals. Through nrgSMART, access to data at the equipment level provides the foundation for managing performance of a distributed DC power distribution system.

- **Individual circuit monitoring:** Measure power at the circuit level. This enables powerful trend analysis and insights into equipment performance and enables preventative maintenance processes.
    - High accuracy, 100% passive monitoring, with no calibration required.
    - Collect voltage and current for both feed and output circuit.
    - Collect temperature using optional nrgTEMP probes.
- **Network data collection:** Intelligent interpretation of the collected data, based on equipment data signature (smart alarms), drives relevant business decisions.

Amphenol Network Solutions
All rights reserved. 3.26.2025 149722-2 Rev A9
509.926.6000 — amphenol-ns.com.com

1.3 300CB08 Configurations

Circuit Breaker Panel:	Part Number:
325A Dual-Feed, 8/8 Panel, Vertical Inputs, Output Terminal Blocks	300CB08
325A Dual-Feed, 8/8 Panel, Horizontal Inputs, Connectorized Outputs, Standard Tie Bar (Connectors purchased separately)	300CB08-C
325A Dual-Feed, 8/8 Panel, Vertical Inputs, Connectorized Outputs (Tie Bar and Connectors purchased separately)	300CB08-SC
nrgSMART Circuit Monitoring, 325A Dual-Feed, 8/8 Panel, Vertical Inputs, Output Terminal Blocks - EOL – Replaced by -SENS and -CTRL versions	nrg300CB08
nrgSMART Circuit Monitoring, Controller, 325A Dual-Feed, 8/8 Panel, Vertical Inputs, Output Terminal Blocks	nrg300CB08-CTRL
nrgSMART Circuit Monitoring, Sensor, 325A Dual-Feed, 8/8 Panel, Vertical Inputs, Output Terminal Blocks	nrg300CB08-SENS
nrgSMART Circuit Monitoring, 325A Dual-Feed, 8/8 Panel, Horizontal Inputs, Connectorized Outputs, Standard Tie Bar (Connectors purchased separately) - EOL – Replaced by -SENS and -CTRL versions	nrg300CB08-C
nrgSMART Circuit Monitoring, Controller, 325A Dual-Feed, 8/8 Panel, Horizontal Inputs, Connectorized Outputs, Standard Tie Bar (Connectors purchased separately)	nrg300CB08-CTRL-C
nrgSMART Circuit Monitoring, Sensor, 325A Dual-Feed, 8/8 Panel, Horizontal Inputs, Connectorized Outputs, Standard Tie Bar (Connectors purchased separately)	nrg300CB08-SENS-C
nrgSMART Circuit Monitoring, Controller, 325A Dual-Feed, 8/8 Panel, Vertical Inputs, Connectorized Outputs (Tie Bar and Connectors purchased separately)	nrg300CB08-CTRL-SC
nrgSMART Circuit Monitoring, Sensor, 325A Dual-Feed, 8/8 Panel, Vertical Inputs, Connectorized Outputs (Tie Bar and Connectors purchased separately)	nrg300CB08-SENS-SC
nrgILS Circuit Monitoring, 325A Dual-Feed, 8/8 Panel, Vertical Inputs, Output Terminal Blocks	nrgILS300CB08
nrgILS Circuit Monitoring, 325A Dual-Feed, 8/8 Panel, Horizontal Inputs, Connectorized Outputs, Standard Tie Bar (Connectors purchased separately)	nrgILS300CB08-C

Additionally, kits can be purchased to convert -SENS panels to -CTRL panels, and vise-versa:

Conversion Kit	Part Number:
KIT:SENS TO CTRL CONVERSION, nrgSMART, nrg300CB08	307802
KIT:CTRL TO SENS CONVERSION, nrgSMART, nrg300CB08	307803

1.4 300CB08 Overview

The Amphenol Network Solutions 300CB08 family of 1RU, dual-feed 325A per feed, power distribution panels provide high-capacity, ±48V, ±24V, and ±12V power protection for secondary power distribution to data and communications equipment. The Amphenol Network Solutions 300CB08 family panels are also ideal for primary distribution in small central offices and at remote sites.

Amphenol Network Solutions
All rights reserved. 3.26.2025 149722-2 Rev A9
509.926.6000 — amphenol-ns.com.com



Fig. 1-1: 300CB08 Front View (included blanking covers shown installed)



Fig. 1-2: nrg300CB08-CTRL Rear View



Amphenol Network Solutions
All rights reserved. 3.26.2025 149722-2 Rev A9
509.926.6000 — amphenol-ns.com.com

Fig. 1-3: nrg300CB08-SENS-C Front View



Fig. 1-4: 300CB08-C Rear View

This panel accommodates AIRPAX 1U circuit breakers. It has positions for 16 bullet-style, plug-in circuit breakers. The panel is UL rated using 60A breakers with a maximum continuous output load of 48A. The panel will not be UL rated when using non-UL rated breakers or breakers with a higher amperage rating. Circuit breakers are sold separately. See amphenol-ns.com to order circuit breakers.

Sides A and B are electrically isolated including the alarm card, which contains power and circuit breaker status relays with dry, Form-C contacts. The contacts are connected to wire-wrap pins for connecting to external visual/audio alarms. Pins can also mate to a TE Connectivity 3-640428-3 connector. The alarm card also controls the four indicator LEDs on the front panel.

This panel is available with standard terminal block outputs or connectorized outputs. All input, output and alarm terminals are within the panel.

For the standard configurations, the feed inputs are vertical dual stud terminals, and the outputs are staggered terminal blocks to accommodate waterfall cable management. The BATT and RTN inputs accommodate dual-hole lugs and the outputs accommodate single-hole lugs. The input terminals are studs, while the output terminals are screws.

For the -C configurations, the feed inputs are horizontal busbars, and the outputs are connectors. This allows input and output cables to exit straight back from the panel. The BATT and RTN inputs accommodate dual-hole lugs. The input landings have holes with 5/8” to 1” spacing. The outputs accommodate connectors that are easily assembled during installation.

For the -SC configurations, the feed inputs are vertical dual stud terminals, and the outputs are connectors. The input cables can be routed directly from above and the output cables exit straight back from the panel. The BATT and RTN input terminals are studs and accommodate dual-hole lugs. The outputs accommodate connectors that are easily assembled during installation.

The ground terminals can accommodate either dual-hole or single-hole lugs. The ground terminals are bolt connections on the sides of the panel, near the rear, and on the bottom of the panel, near the center rear. Only one ground connection is required.

Amphenol Network Solutions
All rights reserved. 3.26.2025 149722-2 Rev A9
509.926.6000 — amphenol-ns.com.com

The nrgSMART panels are now available with an integrated controller, designated with a “CTRL” in the part number. This embeds a primary controller directly into the fuse panel, eliminating the need for a separate external controller. For customers that desire 1-point connectivity to a single controller for multiple panels, nrgSMART Sensor panels can be connected to the Controller (CTRL) panel. These Sensor panels are designated with “SENS” in the part number. The Sensors panel contain all required nrgSMART sensing electronics but do not contain the controller electronics. The nrgSMART electronics of Controller and Sensor panels are powered directly off the A and B feeds, while legacy panels are powered off the primary separate external controller through the nrgNET cable. Since, the CTRL panel does not provide power through the nrgNET cable, legacy panels cannot be connected to it. Sensor panels are capable of being daisy chained with legacy nrgCONTROL-BT external controllers. The ILS panels are both “CTRL or SENS” selectable in the software. The nrgCONTROL-BT still requires the use of a service link.

NOTE: Do not connect multiple CTRL panels together.

NOTE: Do not connect a CTRL panel to an nrgCONTROL-BT external controller.

For flexibility, a Sensor panel can be upgraded to include an integrated Controller, and a CTRL panel can be downgraded to a SENS panel. Changes can be made in the field by exchanging a circuit board and front panel. Contact Amphenol Network Solutions for more details.

1.5 Specifications

Inputs:	**Specifications:**
Voltage range (nominal voltage)	±12VDC, ±24VDC and ±48VDC
Max. input load rating	325A @ 45°C per panel (De-rated to 200A @ 70°C)
Short circuit withstand rating	5000A
Nominal power loss at full load	Less than 45W per side @15,600W full load per side (325A x 48V); 325A @ 45°C per panel (De-rated to 200A @ 70°C)
Percentage of full power dissipation at nominal voltage	Less than 0.5%
Max. input interrupt device	125% of panel rating (for 325A rated feeds)
Optional (Standard and -SC Versions): Vertical input terminal studs (with Keps nuts and flat washers) for dual-hole compression lugs	Two pairs of $^{3}/_{8}$-16 studs on 1" centers per terminal [max. lug width of 1.15" (29.2 mm)]. Torque nut (using $^{9}/_{16}$" or 15 mm socket) to 150 in/lb. (~17 N•m), max.
Optional (-C Versions): Horizontal input terminal landings (with Keps nuts, flat washers, and bolts) for dual-hole compression lugs	Two pairs of $^{3}/_{8}$” holes on $^{5}/_{8}$”-1" centers per terminal [max. lug width of 1.5" (38.1 mm)]. Torque bolt and nut (using $^{9}/_{16}$" or 15 mm sockets) to 150 in/lb. (~17 N•m), max.
Input wire size	2/0 AWG to 350 MCM
Grounding:	**Specifications:**
Earth GND terminal bolts (with washers) for dual-hole compression lug	Three sets of $^{1}/_{4}$-20 threaded holes on $^{5}/_{8}$" centers. Torque bolts (using $^{7}/_{16}$" or 12 mm socket) to 50 in/lb. (5.6 N•m), max.
Ground wire size	#6 AWG to #1 AWG
Outputs:	**Specifications:**
Output circuit breaker	Single-pole: 60A
Output load	Single-pole: 48A continuous
Minimum short circuit interrupt rating	5000A
Optional (Standard Versions): Terminal blocks, single-hole compression lugs	16, #10-32 screws [max. lug width of .50" (12.7)]. Torque screw to 20 in/lb. (2.3 N•m), max.
Optional (Standard Versions): Output wire size, single-hole compression lug	#14 AWG to #4 AWG

Amphenol Network Solutions
All rights reserved. 3.26.2025 149722-2 Rev A9
509.926.6000 — amphenol-ns.com.com

Optional (-C and -SC Versions): Connectors (purchased separately)	16, P40 connector plugs, latching, safe touch
Optional (-C and -SC Versions): Output wire size, connectors	#12 AWG to #6 AWG
Circuit breakers	AIRPAX 1U Series

Alarms:		**Specifications:**
Alarm relay contacts		2A @ 30VDC; 0.6A @ 60VDC
Max. alarm card power rating		@12V: 18 mA (0.22W); @24V: 20 mA (0.48W); @48V: 30 mA (1.44W)
Alarm wire size		#24 AWG, typical (#26 to #20 AWG)
Alarm terminals		Wire wrap or mates with TE Connectivity 3-640428-3
Dimensions:		**Specifications:**
300CB08/nrg300CB08	Height:	1.75" (44 mm)
	Depth:	13.6" (346 mm)
	Width:	17.0" (432 mm) without brackets
		19” and 23” brackets included with panel
nrgILS300CB08	Height:	1.75" (44 mm)
	Depth:	13.6" (346 mm)
	Width:	17.0" (432 mm) without brackets
		19” and 23” brackets included with panel
300CB08-C/nrg300CB08-C		
	Height:	1.75" (44 mm)
	Depth:	18.8" (478 mm) without tie bar
		22.0" (559 mm) with tie bar
	Width:	17.0" (432 mm) without brackets
		19” and 23” brackets included with panel
		Tie bar included with panel
		Cable-end connectors not included with panel
nrgILS300CB08-C	Height:	1.75" (44 mm)
	Depth:	18.8" (478 mm) without tie bar
	Width:	22.0" (559 mm) with tie bar
		17.0" (432 mm) without brackets
		19” and 23” brackets included with panel
		Tie bar included with panel
		Cable-end connectors not included with panel
300CB08-SC/nrg300CB08-SC	Height:	1.75" (44 mm)
	Depth:	13.6" (346 mm) without tie bar
		17.2” (437 mm) with tie bar
	Width:	17.0" (432 mm) without brackets
		19” and 23” brackets included with panel
		Tie bar and cable-end connectors not included with panel
Compliance:		**Specifications:**
UL		Listed
NEBS		Level 3
Voltage Sensor (nrgSMART model only):		**Specifications:**
Sensor accuracy		-19.99 to +19.99V: ± 0.3V
		-20V to -60V: ± 0.1V
		+20V to +60V: ± 0.1V
Voltage measurement range		-60 to +60 VDC
NOTE:		

Amphenol Network Solutions
All rights reserved. 3.26.2025 149722-2 Rev A9
509.926.6000 — amphenol-ns.com.com

• Voltage measurement may be slightly different than at input terminal blocks due to the voltage drop within the panel. • Sensors are factory calibrated and do not require user adjustment.	
Current Sensor (nrgSMART model only):	**Specifications:**
Precision / accuracy	±5% precision, ±0.25A accuracy Example: 40A current, will measure 40A ± (40A*5%) ± 0.25A = 40A ± 2.0A ± 0.25A = 37.75A to 42.25A
Communication (nrgSMART model only):	**Specifications:**
nrgOS minimum required version	nrgOS 5.1.4
nrgNET communication protocol	Proprietary serial protocol used to communicate between panels and controller
nrgNET connector	Removable 5-pin connector with screw down terminals
nrgNET connector ILS panels	Removable RJ45
nrgNET connector functions	nrgNET IN from the Controller or upstream nrgSMART/nrgILS panel, nrgNET OUT to downstream nrgSMART/nrgILS panel

Amphenol Network Solutions
All rights reserved. 3.26.2025 149722-2 Rev A9
509.926.6000 — amphenol-ns.com.com

Section Two: Installation

2.1 Important Installation Guidelines

- **Elevated Operating Ambient Temperature:** If installed in a closed or multi-unit rack assembly, the operating ambient temperature of the rack environment may be greater than room ambient. Consider installing the equipment in an environment compatible with the maximum ambient temperature (Tma) specified by the manufacturer.
- **Reduced Air Flow:** Maintain the amount of air flow required for safe operation when installing the equipment in a rack.
- **Mechanical Loading:** Ensure mechanical loading is even to prevent hazardous conditions.
- **Circuit Overloading:** Overloading circuits may affect your overcurrent protection and supply wiring. Use equipment nameplate ratings.
- **Reliable Earthing:** Maintain reliable earthing of rack-mounted equipment. Pay attention to supply connections other than direct connections to the branch circuit.
- **Disconnect Device:** Incorporate a readily accessible disconnect device in the building installation wiring.

2.2 Installation Instructions

ALERT

ALERT! Only qualified technicians may install and maintain this product. Verify all connections meet requirements specified in local electric codes or operating company guidelines before supplying power. Protect this equipment with a breaker sufficient to interrupt power levels specified.

ALERT! Verify all connections meet requirements specified in local electric codes or operating company guidelines before supplying power. Unit shall be protected by a listed circuit breaker or branch-rated fuse rated minimum 125% of panel rating (for 325A rated feeds).

ALERT! Install this product in locations accessible only to qualified personnel.

Please read these instructions carefully before beginning installation. If assistance is required, call Amphenol Network Solutions Technical Support at 1-509-926-6000 or email us at support@amphenol-ns.com.

When you receive the equipment, carefully unpack it and compare it to the packaging list. Please report any defective or missing parts to Amphenol Network Solutions Quality at quality@amphenol-ns.com or call 1-509-926-6000.

Amphenol Network Solutions is not liable for transit damage. If the product is damaged, please report it to the carrier and contact Amphenol Network Solutions Quality.

NOTE: For service or warranty information, please visit amphenol-ns.com and click on the support tab, email Amphenol Network Solutions at getinfo@amphenol-ns.com or call us at 1-509-926-6000.

NOTE: The 300CB08 family is suitable for installation as part of a Common Bonding Network (CBN) for installation in Network Telecommunication Facilities and OSP.

NOTE: The 300CB08 family is DC-I and can be grounded in both CBN and IBN networks. All feeds have isolated returns and the chassis grounds are isolated from all returns. The 300CB08 family is suitable for installation in Network Telecommunication Facilities and in locations where the NEC applies.

Amphenol Network Solutions
All rights reserved. 3.26.2025 149722-2 Rev A9
509.926.6000 — amphenol-ns.com.com

2.2.1 Mounting Brackets

1. The mounting brackets can be installed in 6 positions, from flush to 5 inch offset in 1 inch increments. Use included hardware to install the mounting brackets. Both 19” and 23” mounting brackets are included.
2. Tighten screws to 20 in/lb. (2.23 N•m).

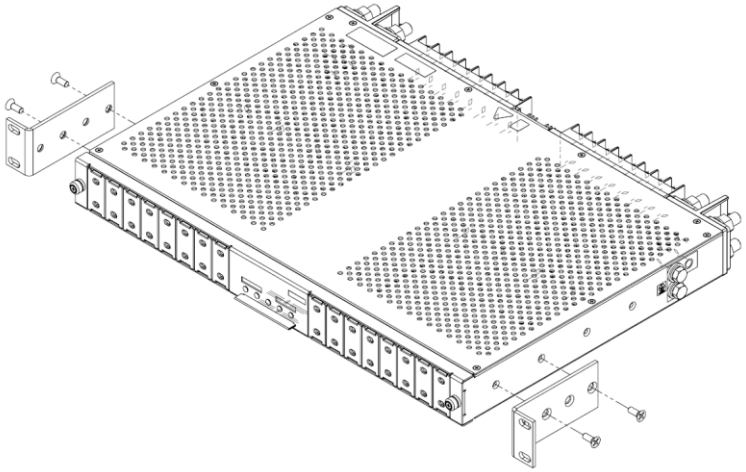

Fig. 2-1: Installing Mounting Brackets

2.2.2 Tie Bar Installation and Optional 4 Post Mounting Bracket (-C Versions)

3. Use included hardware to install tie bar. Standard tie bar is included in -C connectorized panels.
4. Tighten screws to 20 in/lb. (2.3 N•m).

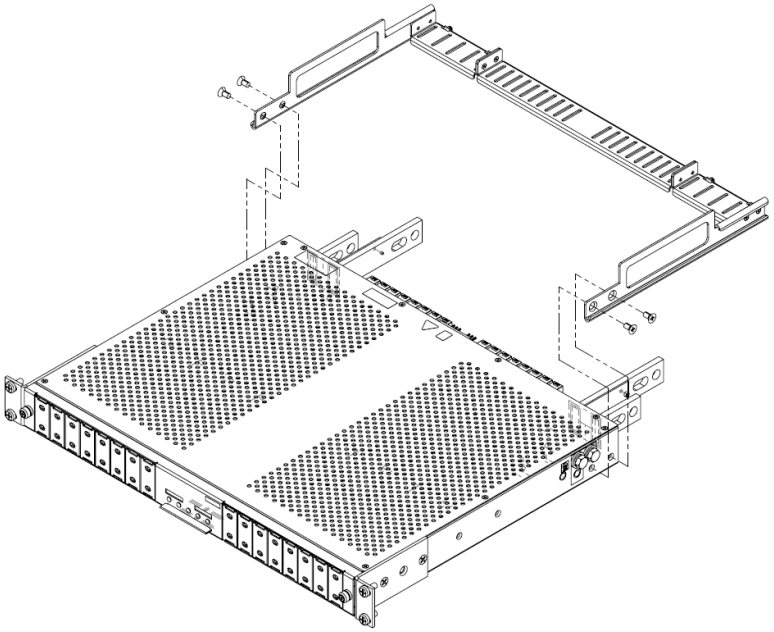

Fig. 2-2: Installing -C Tie Bar

Amphenol Network Solutions
All rights reserved. 3.26.2025 149722-2 Rev A9
509.926.6000 — amphenol-ns.com.com

5. 4 post mounting brackets are an optional accessory for -C connectorized panels and are purchased separately. Slide 4 post mounting brackets into the tie bar. This step can also be done after the front of the panel is mounted in the rack.

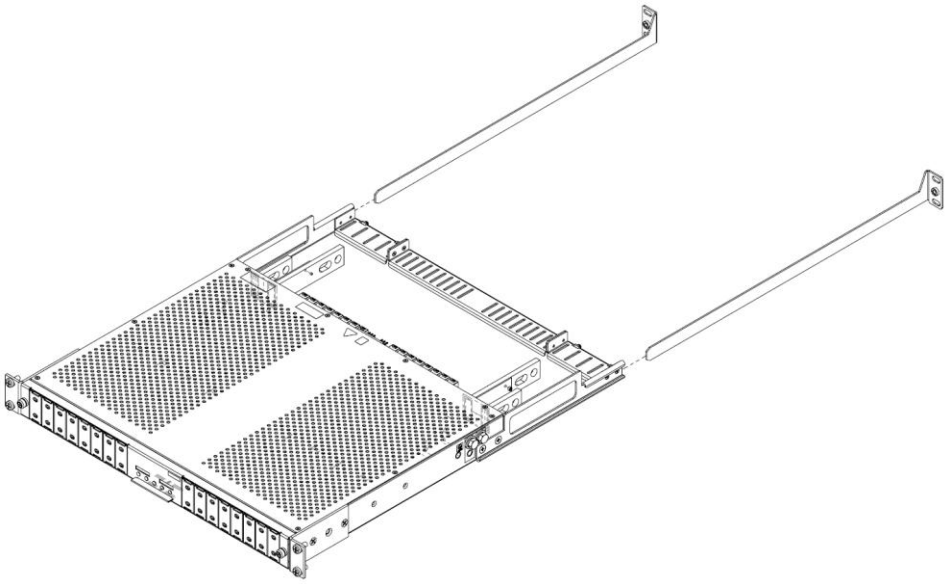

Fig. 2-3: Installing Optional 4 Post Mounting Brackets

2.2.3 Optional Tie Bar Installation (-SC Versions)

6. Tie bar is an optional accessory for -SC connectorized panels and is purchased separately. Use hardware included in accessory kit to install tie bar.
7. Tighten screws to 20 in/lb. (2.3 N•m).

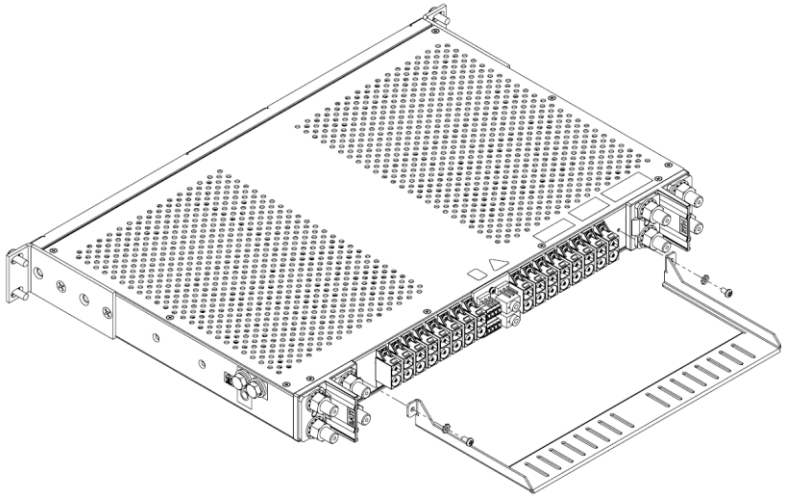

Fig. 2-4: Installing Optional -SC Tie Bar

Amphenol Network Solutions
All rights reserved. 3.26.2025 149722-2 Rev A9
509.926.6000 — amphenol-ns.com.com

2.2.4 Rack Mounting

8. Locate an unused rack position and mount the panel using two sets of fasteners per side, as shown in Fig. 2-5. Mount the panel as high as possible on the rack. Use a seismic rack for best rigidity.
9. Tighten screws to 35 in/lb. (3.9 N•m).

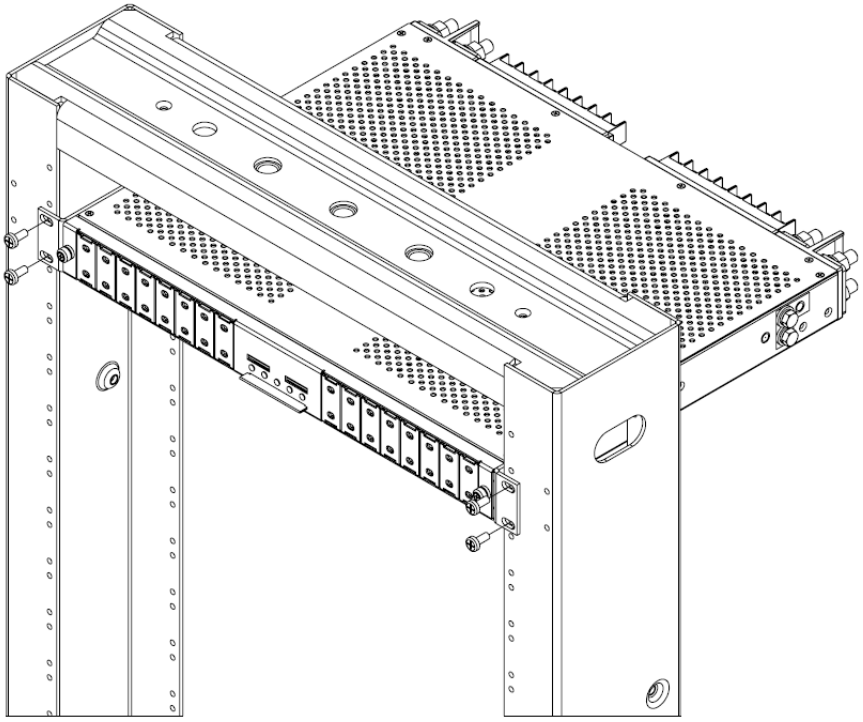

Fig. 2-5: Installing Panel in Rack

Amphenol Network Solutions
All rights reserved. 3.26.2025 149722-2 Rev A9
509.926.6000 — amphenol-ns.com.com

2.2.5 Grounding

WARNING

WARNING! Failure to properly ground this equipment can create hazardous conditions to installation personnel and to the equipment.

ALERT

ALERT! Only use components and crimping tools approved by agencies or certifying bodies recognized in your country or region such as Underwriter's Laboratories (UL), TUV, etc.

10. Use an approved crimping tool to attach an approved, dual-hole compression lug onto suitable grounding wire. (Size of ground depends on input interruption device.)
11. If required, lightly coat antioxidant on lug and grounding surface on the side or bottom of the panel. Connect the lug using $^{1}/_{4}$-20 bolts, split washers and flat washers provided, as shown in Fig. 2-6.
12. Tighten the bolt to 50 in/lb. (5.6 N•m).

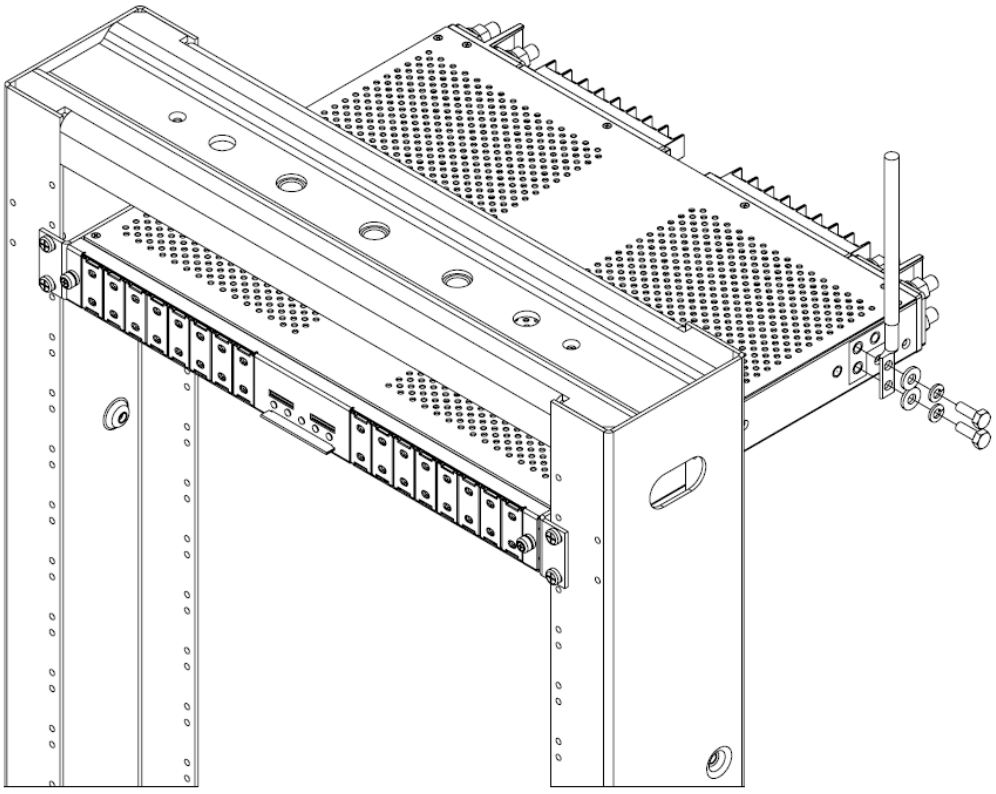

Fig. 2-6: Grounding Lug Connection

Amphenol Network Solutions
All rights reserved. 3.26.2025 149722-2 Rev A9
509.926.6000 — amphenol-ns.com.com

2.2.6 Input Wiring

⚠ WARNING

WARNING! Before connecting input power cables, make sure input power to the panel is turned off.

13. Make sure input power is off before connecting the panel's input cables to the PDU or battery.
14. For input wiring, crimp dual-hole compression lugs onto 2/0 AWG to 350 MCM copper wires. The choice of input wiring depends on the following criteria:
    - Input interrupt device rating affects the size of input wiring.
    - Ambient operating temperature affects the type of input wire insulation. For further information, consult the National Electrical Code (NEC).
15. Insulate the lug barrels with UL94 V-0 rated heat-shrink tubing.
16. Clean terminals and lugs with a non-abrasive, non-metallic pad.
17. If required, lightly coat antioxidant on lugs and input BATT and RTN terminals and then connect lugs to input terminals, as shown in Fig. 2-7.
18. Tighten nut to 150 in/lb. (~17 N•m), max.

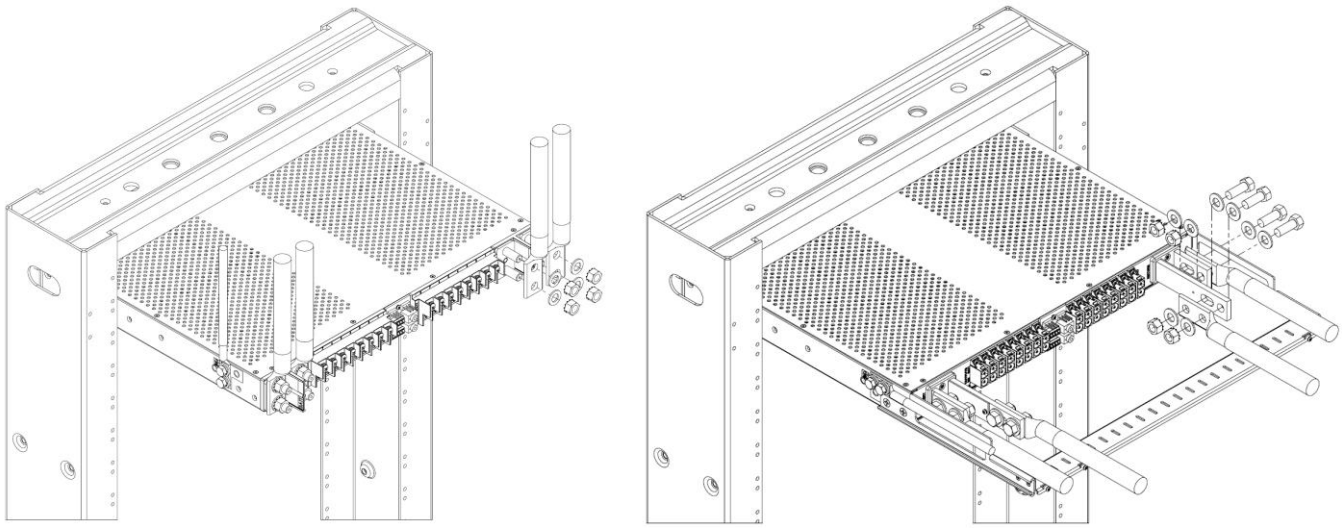

Fig. 2-7: Input Lugs

Amphenol Network Solutions
All rights reserved. 3.26.2025 149722-2 Rev A9
509.926.6000 — amphenol-ns.com.com

2.2.7 Remove Front Cover

19. Remove front cover by unscrewing thumb screws or using Phillips screwdriver, as shown in Fig. 2-8. Once the front cover has been taken off the panel, remove and discard the small pink packaging foam piece inside the front cover. Re-install front cover.

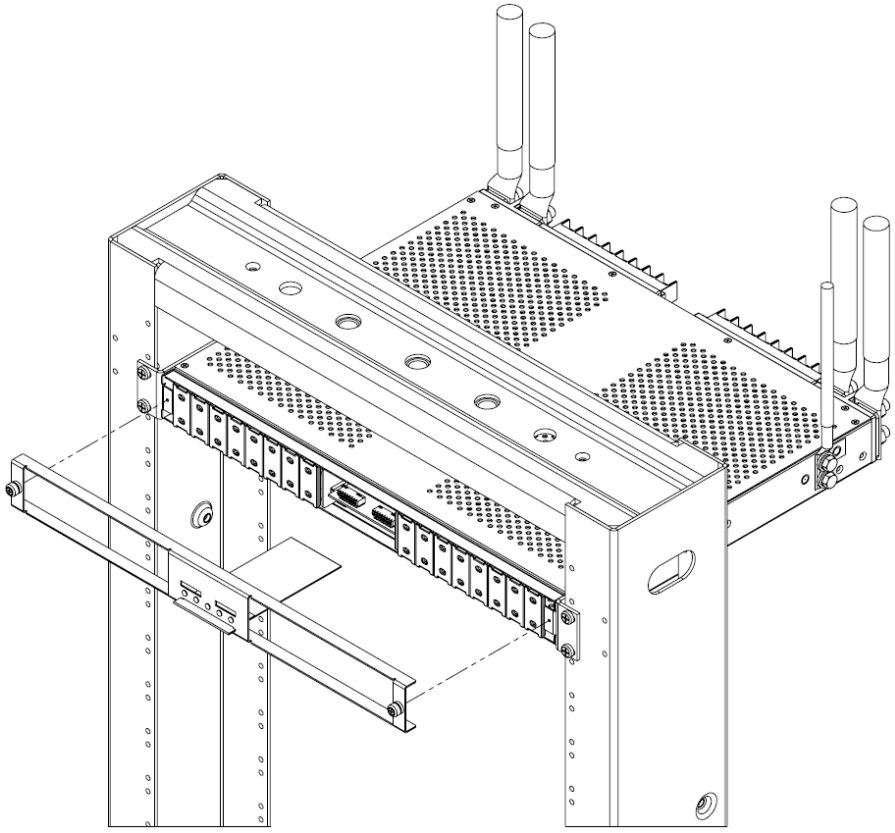

Fig. 2-8: Removing the Front Cover

Amphenol Network Solutions
All rights reserved. 3.26.2025 149722-2 Rev A9
509.926.6000 — amphenol-ns.com.com

2.2.8 Installing Breakers

⚠ WARNING

WARNING! Ensure circuit breaker is in off position before installing into panel.

20. Install touch guard cover onto circuit breaker as shown. Install Position designation label over top screw of cover as desired, see Fig. 2-9a. Next, install circuit breaker into the desired circuit, as shown in Fig. 2-9b. Ensure “Line” is on top.

NOTE: Ensure the corresponding DIP switches for installed breakers are in the down (ON) position and that the DIP switches for the corresponding empty positions are in the up (OFF) position.

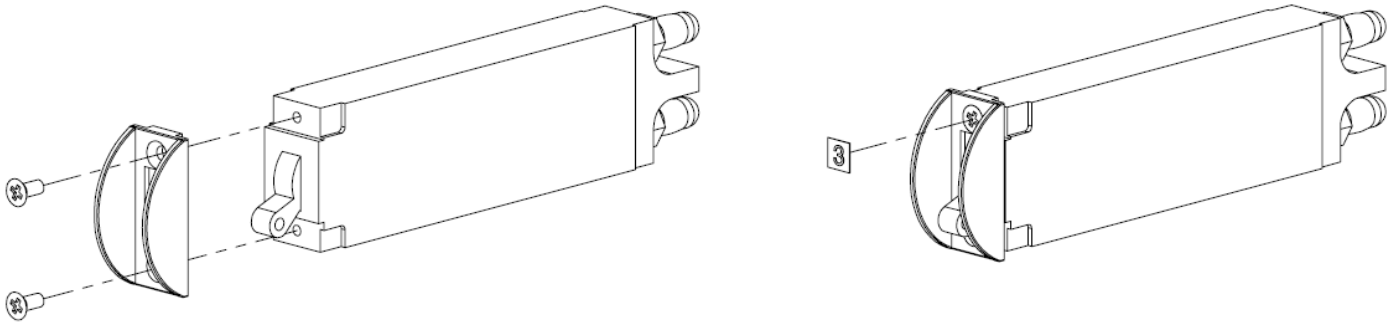

Fig. 2-9a: Installing Breaker Cover and Position Designation Label

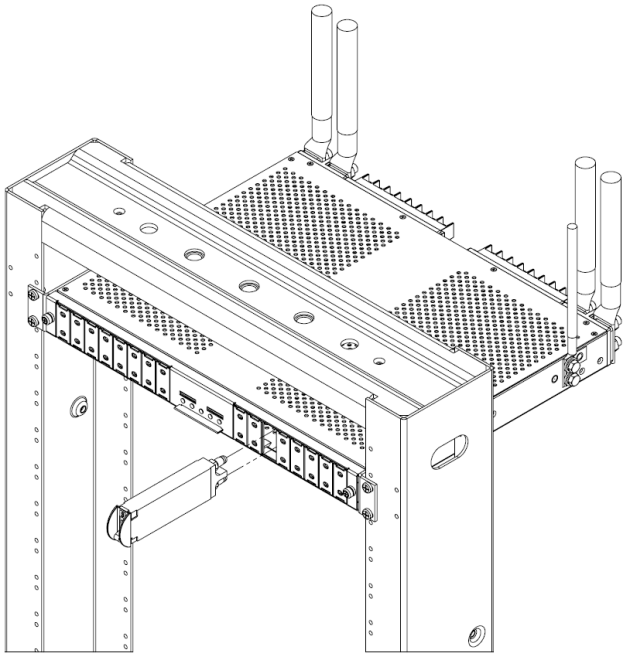

Fig. 2-9b: Installing Breakers

Amphenol Network Solutions
All rights reserved. 3.26.2025 149722-2 Rev A9
509.926.6000 — amphenol-ns.com.com

2.2.9 Alarming

21. When installing breakers, turn on the corresponding DIP switch by flipping the switch on (down position). This will turn on the alarming function for the breakers that are installed. If a breaker is not installed, that corresponding DIP switch needs to be turned off (up position) to prevent false alarming. They are numbered 1-8 for both sides A and B that corresponds to the adjacent breaker. For ILS panels: The DIP switches in the up position they are always on and not controlled via software.

NOTE: For nrgSMART panel only. When removing or installing new circuit breakers, ensure the changes are updated in the nrgSMART configuration wizard.

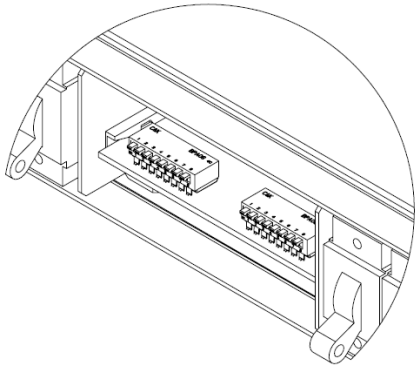

Fig. 2-10: DIP Switches

22. With all the installed breakers off, enable the breaker at the primary distribution unit or battery, 125% of panel rating (for 325A rated feeds) to turn on Feed A to Side A of the panel. Check voltage and polarity at input connectors of the panel.

    Verify the following:
    - A PWR LED on the front of panel turns green
    - A ALM LED on the front of panel turns red
    - B PWR LED remains off
    - B ALM LED remains off

23. With A PWR LED green (normal operation) and A ALM LED red (alarm state) — but with B PWR LED and B ALM LED off — test ALM relay and contact alarm terminals:
    - Expect an open circuit (∞Ω) between terminals C and NC
    - Expect continuity (0Ω) between terminals C and NO

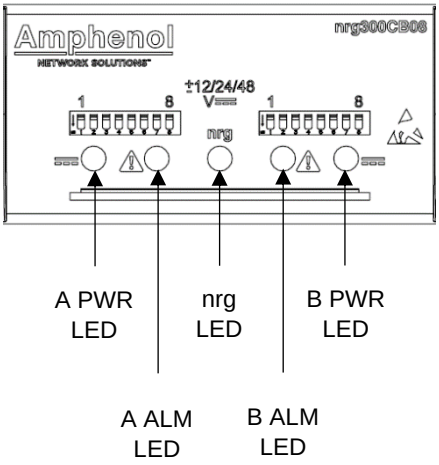

Fig. 2-11: nrg300CB08 LED Status

Amphenol Network Solutions
All rights reserved. 3.26.2025 149722-2 Rev A9
509.926.6000 — amphenol-ns.com.com

24. With no output wires connected or with the output loads (devices fed by this panel) disabled, turn on all of the installed breakers.

    Verify the following:

    - A PWR LED on the front of panel turns green
    - A ALM LED turns off
    - B PWR LED remains off
    - B ALM LED remains off

25. If A ALM LED is red, verify that all of the DIP switches for all empty breakers positions are up (OFF).
26. With A PWR LED green (normal operation) and A ALM LED off (normal state) —but with B PWR LED and B ALM LED off — test A ALM relay and contact terminals:

    - Expect continuity (0Ω) between terminals C and NC
    - Expect an open circuit (∞Ω) between terminals C and NO

27. Repeat steps 21-26 to power up side B. A PWR and B PWR LEDs must both be green.

NOTE: Step 28 is for nrgSMART model only.

28. Connect nrgNET cable to the rear of the panel. The nrg LED will have the following conditions.

    - nrg LED is off: No power supplied from nrgNET cable.
    - nrg LED is red: Power supplied from nrgNET cable, no communication to Controller.
    - nrg LED is green: Power supplied from nrgNET cable, active communication to Controller.
    - nrg LED is flashing red: Power supplied from nrgNET cable, error in communication to Controller.

29. Reinstall the cover to the front of the panel using the thumb screws or a Phillips screwdriver.

2.2.10 Blanking Cover

30. For any unfilled breaker position a blanking cover must be placed over the opening on the front cover. NOTE: blanking covers included with panel in separate bag.

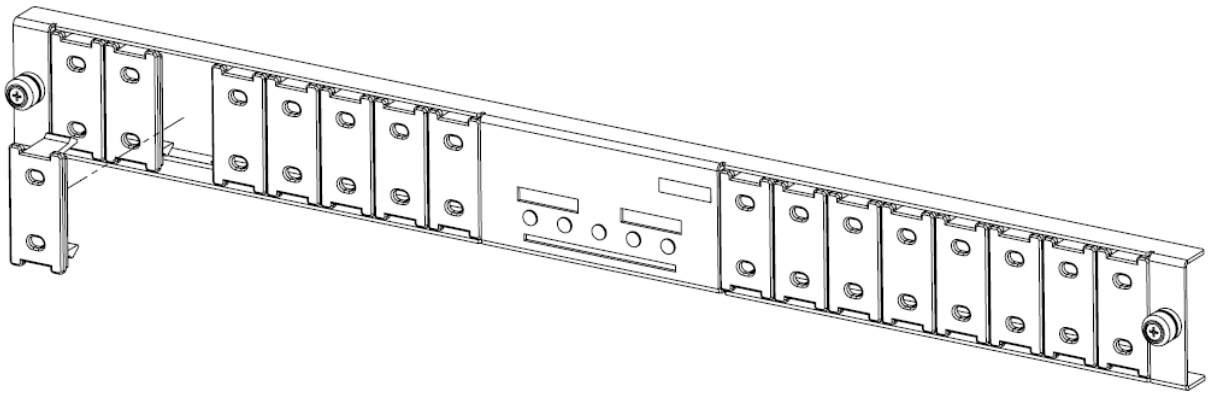

Fig. 2-12: Blanking Cover

Amphenol Network Solutions
All rights reserved. 3.26.2025 149722-2 Rev A9
509.926.6000 — amphenol-ns.com.com

2.2.11 Alarm Terminals

31. The alarm terminals, nrgTEMP connectors, and nrgNET connectors are located in the rear center of the panel. Refer to Fig. 2-13.

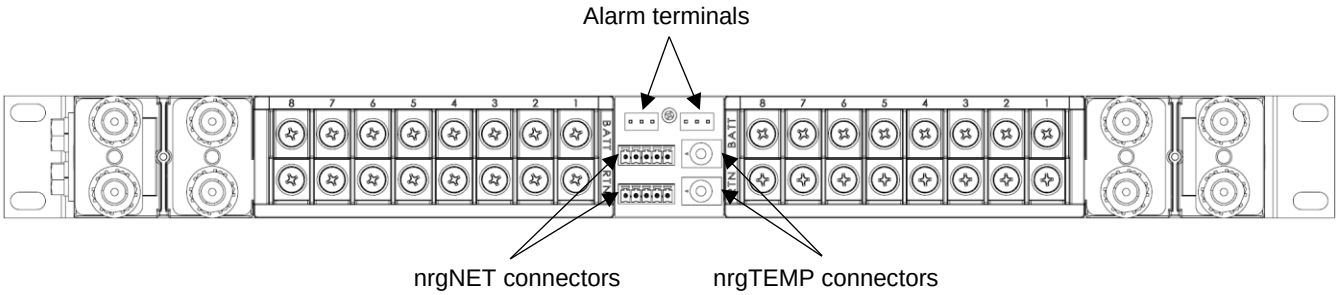

Fig. 2-13: nrg300CB08 Alarm Terminals

32. For the alarm terminals, it is possible to use a short, manual wire-wrap tool to install alarm wiring after securing the panel to the rack. As an alternate to wire wrap, TE Connectivity insulation displacement connector, part number 3-640428-3, can be used to connect to the alarm terminals.
33. Two nrgTEMP connectors are available on the panel and accept the optional nrgTEMP probes.
34. The Amphenol Network Solutions proprietary communication link, nrgNET, connects nrgSMART controller panels and nrgSMART panels. Legacy nrgSMART panels used a single cable with four conductors to provide power and data communication. CTRL and SENS panels use the same four conductor cable to provide data communication, with two of the conductors being unused.
35. For nrgNET wiring used to daisy chain the controller panel to the attached nrgSMART panels do the following:
    a. Strip ⅜-in. of insulation away from the four conductor wires in the nrgNET cable
    b. Insert the wires into the connector and tighten the screws to hold the wires in place making sure to connect the proper wire to the pins as illustrated in nrgNET Pin Outs Table 2.9.1 and in Fig. 2-29 or table 2.9.2 and in Fig. 2-30.
    c. Insert the connector into the open end of the controller panel.

2.2.12 nrgSMART Connectivity (-CTRL Versions)

36. The CTRL panels utilize the LAN port location on the front of the unit to connect the controller to the data storage location. The controller can be operated in the following modes simultaneously:

    Local Only Mode:

    - The controller will collect data from all panel sensors that are connected to it over the nrgNET interface.
    - No SNMP traps or data is sent for monitoring.
    - The instantaneous sensor data can be viewed from the front of the controller's LCD screen for all attached monitoring panels.

Amphenol Network Solutions
All rights reserved. 3.26.2025 149722-2 Rev A9
509.926.6000 — amphenol-ns.com.com

SNMP Mode:

- The LAN port must be connected and configured to operate on the same subnet as the customer defined SNMP/ NMS server address.
- The nrgSMART MIB table is available for download at the following URL: https://amphenol-ns.com/Product/nrgsmart-controller
- SNMP traps can be set-up for current threshold crossings, breaker trips or blown fuses, voltage threshold crossings and temperature threshold crossings.
- Sensor data and configuration data can be polled by issuing commands from the NMS.
- The NMS will have to manage and store all collected data.

37. The CTRL panel is DHCP by default and the IP address will be displayed on the front LCD. You will need to set up your PC or server to an address on the same subnet as the CTRL panel. To do this, follow the steps below.
    a. Connect a CAT5 cable to the front panel LAN connector of the CTRL panel.
    b. Go into Network Settings from either the CTRL Panel or the Network icon in the bottom right corner of the task bar on your PC. Note: There will be different paths to get to these settings based on your operating system.
    c. Double-click Ethernet or LAN connection.
    d. Select Internet Protocol Version 4 (TCP/IPv4)
    e. Change your setting from Obtain an IP Address Automatically to Use the IP Address and subnet mask that is in the same subnet as what is displayed on the LCD no gateway or DNS needed.
    f. Hit OK on the next two screens to complete the change.
    g. Open the CTRL panel via a browser by its IP address of 192.168.1.1 Note: Chrome is the recommended browser. Other supported browsers include Firefox.
    h. The Configuration User Interface will be displayed. RJ-45 LAN port
38. The MGMT Port is not enabled and will be updated in a future firmware release.
39. For information on connecting and configuring your nrgSMART panels, please refer to nrgSMART Configuration Guide.

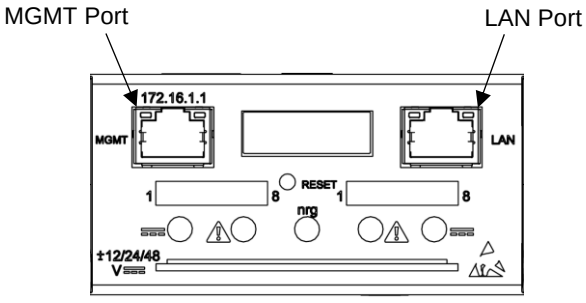

Fig. 2-14: CTRL Panel Connectivity Ports

Amphenol Network Solutions
All rights reserved. 3.26.2025 149722-2 Rev A9
509.926.6000 — amphenol-ns.com.com

2.2.13 Output Wiring (Terminal Block Versions)

⚠ WARNING

WARNING! Before connecting output power cables, make sure input power to the panel is turned off.

41. For output wiring, crimp single-hole lugs onto one end of #14 to #4 AWG copper wires, as required by NEC. (Work with one output wire at a time.)
42. Insulate lug barrels with UL94 V-0 rated heat-shrink tubing.
43. Clean the panel terminal and lugs with a non-abrasive, non-metallic pad.
44. If required, lightly coat antioxidant on lugs and output BATT and RTN terminals and then connect lugs to terminals, as shown in Fig. 2-14. (NEC specifies only one lug and load at each output terminal.)

ⓘ ALERT

ALERT! Do not exceed torque rating. The output terminals are low electrical resistance, free floating terminals. Note that the top output terminals may rotate slightly within the rear of the panel. This is normal.

45. Tighten screws to no more than 20 in/lb. (2.3 N•m), max. Then connect other end of output wire to load.

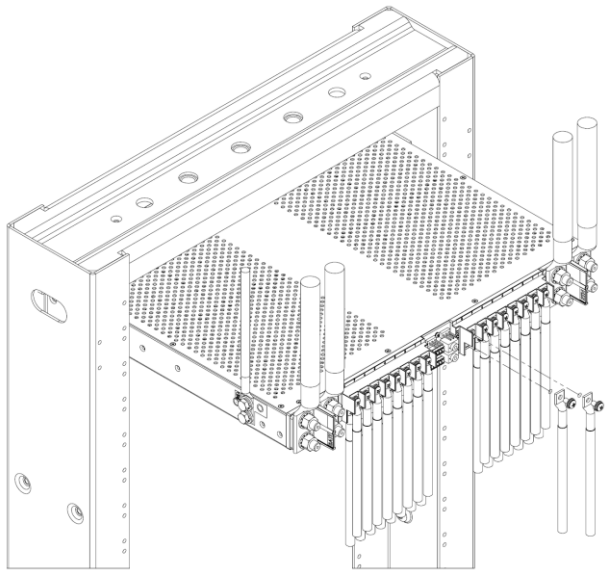

Fig. 2-15: Output Lugs

46. With the output loads (devices fed by this panel) disabled, re-enable breakers at primary distribution unit or battery.
47. If applicable, switch circuit breakers ON and check voltage and polarity *at loads.*
48. Record circuit assignments in accordance with operating company procedures and guidelines.
49. Enable equipment loads one at a time to verify proper operation of loads.

Amphenol Network Solutions
All rights reserved. 3.26.2025 149722-2 Rev A9
509.926.6000 — amphenol-ns.com.com

2.2.14 Output Wiring (Connectorized Versions)

⚠ WARNING

WARNING! Before connecting output power cables, make sure input power to the panel is turned off.

50. P40 output connectors are available in two sizes, #12-10 AWG and #8-6 AWG. Depending on the Output connector, crimp terminals onto one end of #12 to #6 AWG copper wires using Daniels M300BT crimp tool or Burndy Y122CMR crimp tool. (Work with one output wire at a time.)

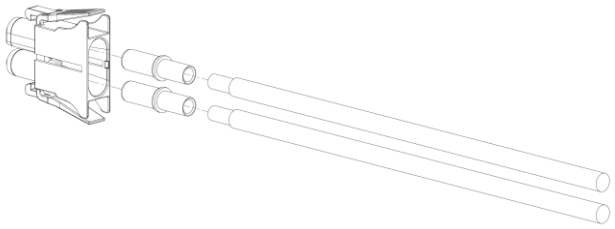

Fig. 2-16: Insert Crimped Terminals

51. Insert terminals into plug housing as shown in Fig. 2-15 and Fig. 2-16. The battery terminal goes in the “D” shaped position on the connector. The return terminal goes in the round housing position.

NOTE: A good way to remember is “Round = Return”.

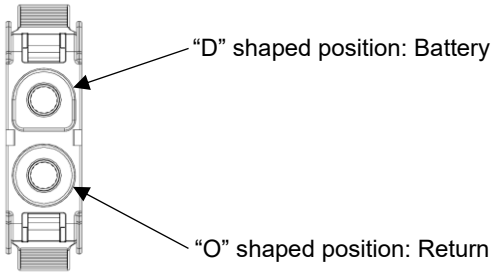

Fig. 2-17: Connector Front View

52. Insert retainer into plug housing as shown in Fig. 2-17. Ensure the retainer flanges are inserted into the connector first.

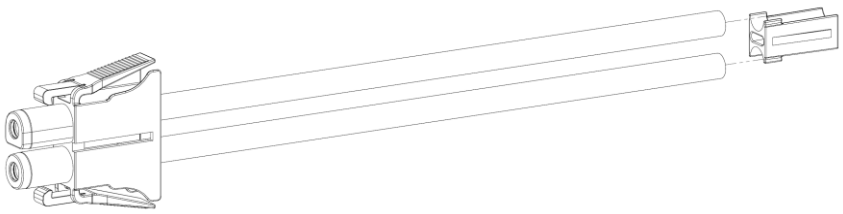

Fig. 2-18: Insert Retainer

Amphenol Network Solutions
All rights reserved. 3.26.2025 149722-2 Rev A9
509.926.6000 — amphenol-ns.com.com

NOTE: If cables were placed in incorrect position, use Contact Removal Tool, PN 150797, to disassemble the connector. Insert the removal tool between the housing and the retainer. With removal tool inserted, grip the plug housing and simultaneously pull on cables and removal tool to remove parts from the housing.

CAUTION

CAUTION! The removal tool is sharp. Care should be taken when disassembling the connector.

53. Insert the connector into the panel. Ensure that the plug latches into place. Then connect other end of output wire to load.

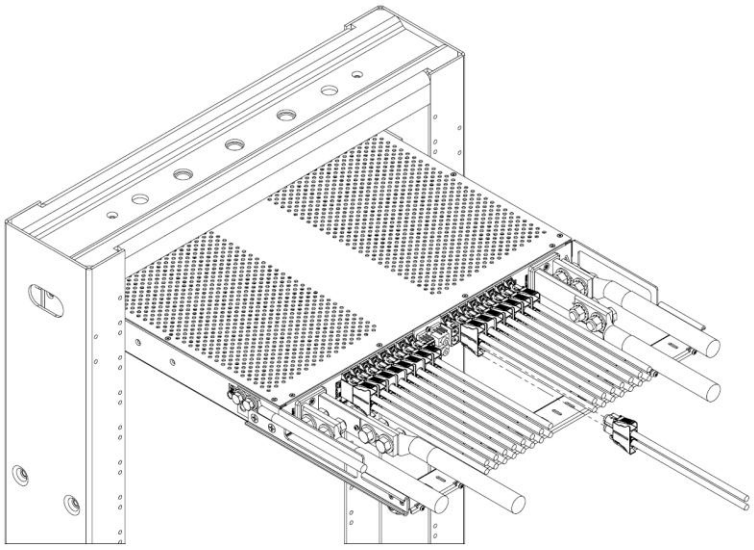

Fig. 2-19: Insert Connector

54. With the output loads (devices fed by this panel) disabled, re-enable breakers at primary distribution unit or battery.
55. If applicable, switch circuit breakers on and check voltage and polarity *at loads.*
56. Record circuit assignments in accordance with operating company procedures and guidelines.
57. Enable equipment loads one at a time to verify proper operation of loads.

Amphenol Network Solutions
All rights reserved. 3.26.2025 149722-2 Rev A9
509.926.6000 — amphenol-ns.com.com

2.2.15 Install Rear Cover

⚠ WARNING

WARNING! The rear cover protects the rear of the panel while energized. Not installing the rear cover may create an electrical hazard.

58. Install rear plastic cover using provided hardware, as shown in Fig. 2-19, Fig. 2-20, and Fig. 2-21.

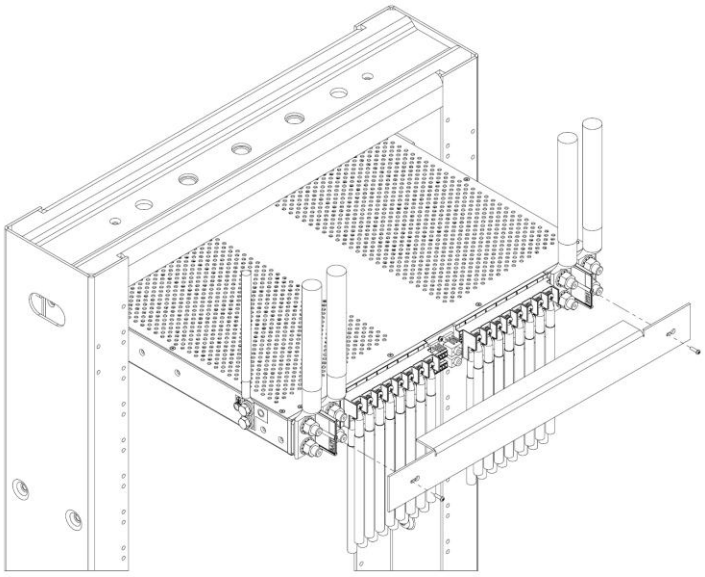

Fig. 2-20: Rear Cover (Standard Versions)

Amphenol Network Solutions
All rights reserved. 3.26.2025 149722-2 Rev A9
509.926.6000 — amphenol-ns.com.com

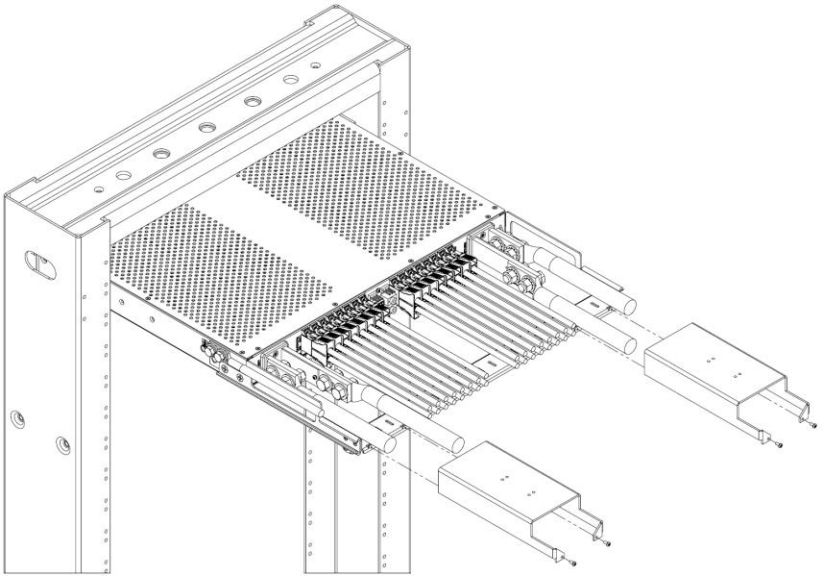

Fig. 2-21: Rear Cover (-C Versions)

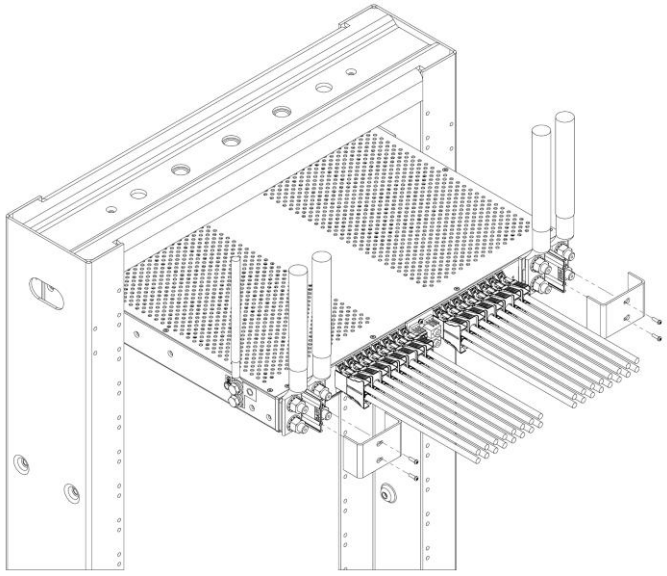

Fig. 2-22: Rear Cover (-SC Versions)

Amphenol Network Solutions
All rights reserved. 3.26.2025 149722-2 Rev A9
509.926.6000 — amphenol-ns.com.com

2.3 Circuit Breaker Puller



Fig. 2-23: Optional Circuit Breaker Puller PN: 307491

2.3.1 Removing Circuit Breakers

⚠ WARNING

WARNING! Ensure circuit breaker is in off position before removing from panel.

1. Remove front cover using thumb screw or Phillips screwdriver.
2. Thread a circuit breaker puller into the captive threaded holes on the front of the circuit breaker.
3. Pull the breaker puller straight back until the circuit breaker is removed from the panel.
4. If the breaker that was removed is not being replaced with a new breaker, ensure the corresponding dip switch is switch to the off (up) position.
5. Reinstall the front cover onto the panel.

2.4 Contact Removal Tool



Fig. 2-24: Optional Contact Removal Tool PN: 150797

Amphenol Network Solutions
All rights reserved. 3.26.2025 149722-2 Rev A9
509.926.6000 — amphenol-ns.com.com

2.5 Tie Bar (-C Versions)

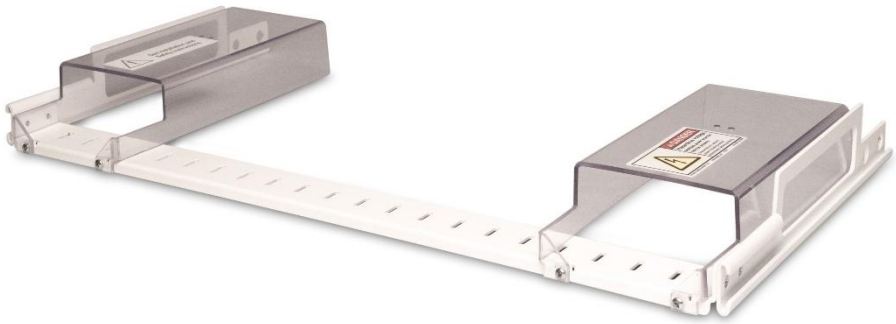

Fig. 2-25: Tie Bar (Included with -C Versions)

2.6 Tie Bar with 4 Post Mounting Brackets (-C Versions)



Fig. 2-26: Tie Bar with Optional 4 Post Mounting Brackets (-C Version Only) PN: 307622

2.7 Tie Bar (-SC Versions)



Fig. 2-27: Optional Tie Bar (-SC Versions) PN: 307661

Amphenol Network Solutions
All rights reserved. 3.26.2025 149722-2 Rev A9
509.926.6000 — amphenol-ns.com.com

2.8 Temperature Probes (nrgSMART Versions)



Fig. 2-28: Optional nrgTEMP Temperature Probe (nrgSMART/ILS Versions) PN: nrgTEMP/nrgILSTEMP

Two temperature probe ports are available on the back of the nrgSMART versions of panels and 1 temperature probe port and 3x I2C ports for Temp, Humidity, AC and other on nrgILS panels. Each port can accept the optional nrgTEMP probe. See Fig. 2-28. To install the temp probes, uncoil the probe and locate the temperature ports on the rear of the panel, as shown below. Plug in the temperature probe to the panel, making sure the probe fully clicks into place.

Once installed you can validate the probe is working by checking the temperature reported. This temperature can be seen on the front LCD screen of the controller, or by looking on the “Panels” page of the browser-based user interface. See the nrgSMART configuration guide for more information on setting up your nrgSMART panel.

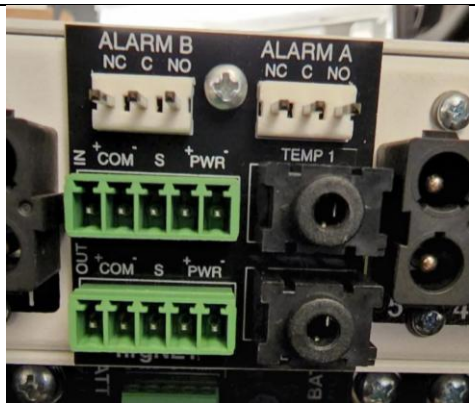

Figure 0-1 - Empty Temp Ports on back of panel

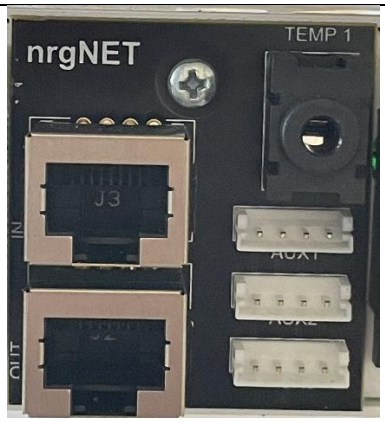

Figure 0-2 – nrgILS Temp Port and I2C Ports



Figure 0-3 - Temperature Readout on Front LCD Screen

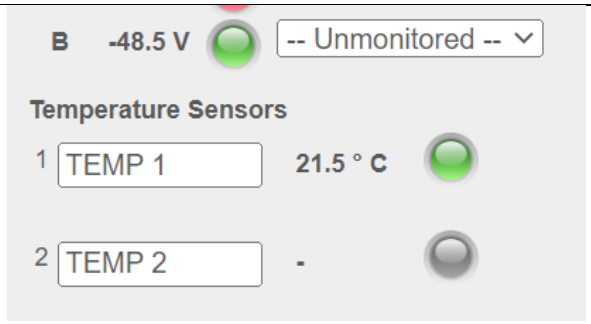

Figure 0-4 - Temperature Readout in GUI Panel Page

Amphenol Network Solutions
All rights reserved. 3.26.2025 149722-2 Rev A9
509.926.6000 — amphenol-ns.com.com

2.9 nrgNET Pinouts (nrgSMART Versions)

2.9.1 nrgNET Pinouts (Legacy)

Pin Number	Label	Wire
Pin 1	COM +	White (22 AWG)
Pin 2	COM -	Blue (22 AWG)
Pin 3	S	Drain Wire (24 AWG)
Pin 4	PWR +	Black (18 AWG)
Pin 5	PWER -	Red (18 AWG)

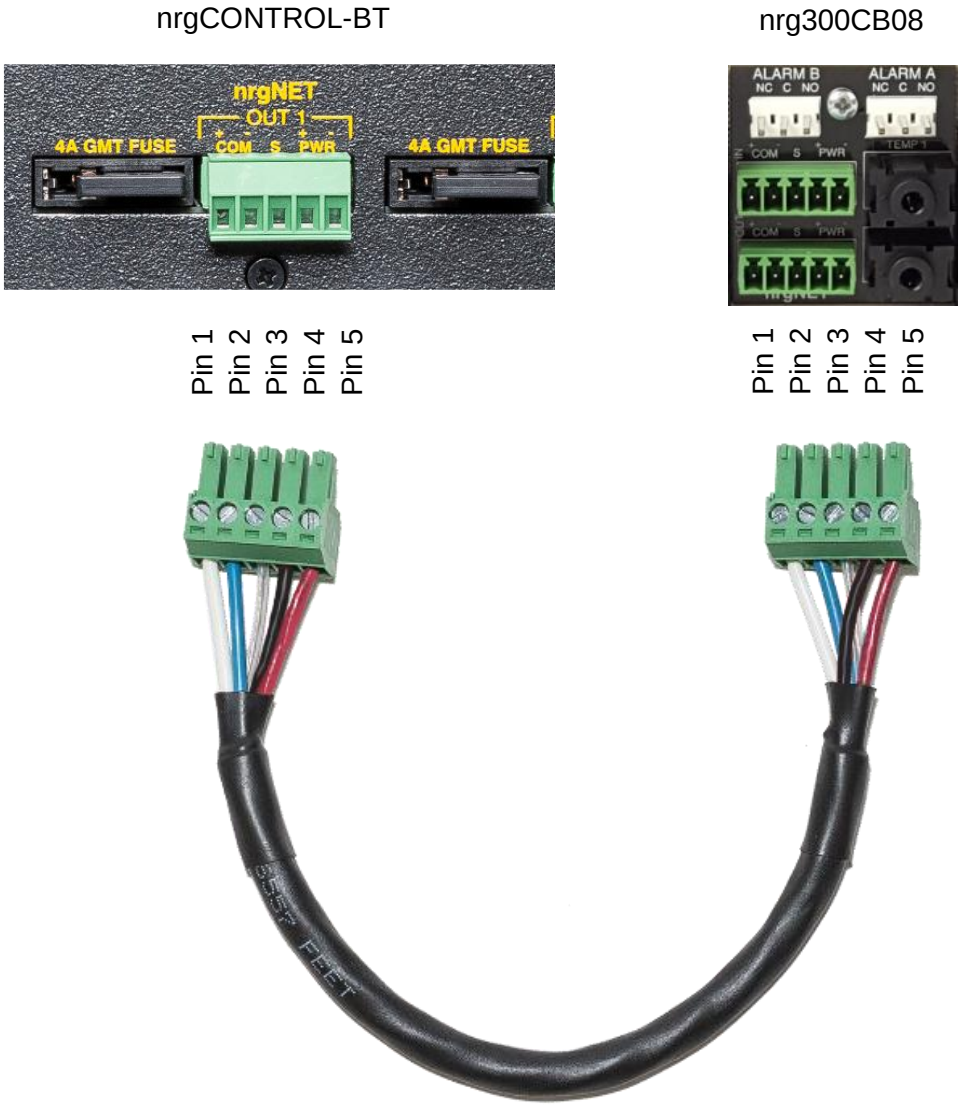

Fig. 2-29: nrgNET Pinout Connections (Legacy)

Amphenol Network Solutions
All rights reserved. 3.26.2025 149722-2 Rev A9
509.926.6000 — amphenol-ns.com.com

2.9.2 nrgNET Pinouts (Integrated Controller)

Pin Number	Label	Wire
Pin 1	COM +	White (22 AWG)
Pin 2	COM -	Blue (22 AWG)
Pin 3	S	Drain Wire (24 AWG)
Pin 4	PWR +	Not Used
Pin 5	PWER -	Not Used

CTRL Panel



Pin 1
Pin 2
Pin 3
Pin 4
Pin 5

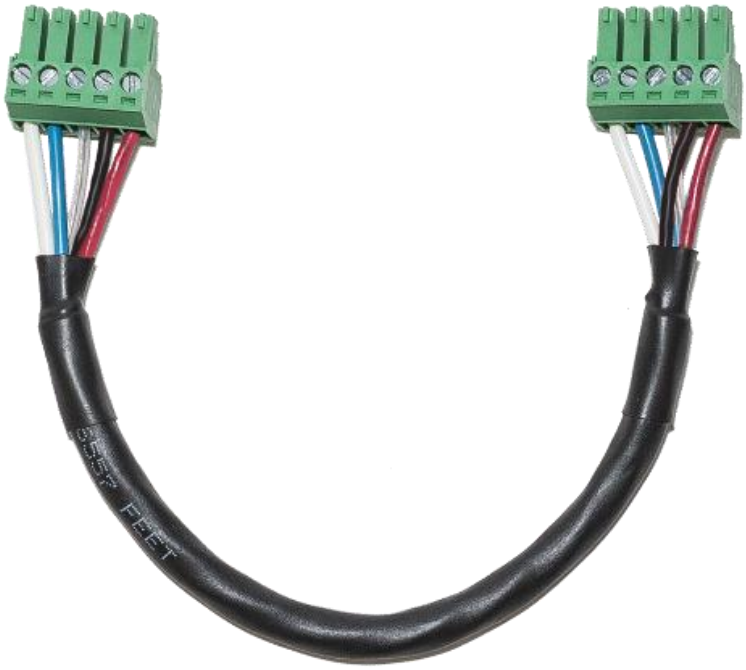

SENS Panel



Pin 1
Pin 2
Pin 3
Pin 4
Pin 5

nrgILS Panels

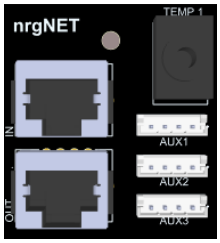

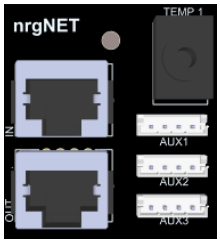

568 A or B

568 A or B



Fig. 2-30: nrgNET Connections (Integrated Controller)

Amphenol Network Solutions
All rights reserved. 3.26.2025 149722-2 Rev A9
509.926.6000 — amphenol-ns.com.com

2.10 Parts & Accessories

The following tables list optional and replacement items for the panel. For wire sizing and labeling, please refer to *Wire Sizing & Label Convention* (Amphenol Network Solutions Part No. 117995) included with your panel. Order parts and accessories online at amphenol-ns.com.

Steps for configuring a panel:

6. Determine the number of load connections required (one load connection per populated breaker position).
7. Select circuit breakers:
    - Select circuit breaker quantity equal to the number of load connections
    - Select circuit breaker amperage values

2.10.1 Ordering Information

Circuit Breaker Panel	Part Number:
325A Dual-Feed, 8/8 Panel, Vertical Inputs, Output Terminal Blocks	300CB08
325A Dual-Feed, 8/8 Panel, Horizontal Inputs, Connectorized Outputs, Standard Tie Bar (Connectors purchased separately)	300CB08-C
325A Dual-Feed, 8/8 Panel, Vertical Inputs, Connectorized Outputs (Tie bar and connectors purchased separately	300CB08-SC
nrgSMART Circuit Monitoring, Controller, 325A Dual-Feed, 8/8 Panel, Vertical Inputs, Output Terminal Blocks	nrg300CB08-CTRL
nrgSMART Circuit Monitoring, Sensor, 325A Dual-Feed, 8/8 Panel, Vertical Inputs, Output Terminal Blocks	nrg300CB08-SENS
nrgSMART Circuit Monitoring, Controller, 325A Dual-Feed, 8/8 Panel, Horizontal Inputs, Connectorized Outputs, Standard Tie Bar (Connectors purchased separately)	nrg300CB08-CTRL-C
nrgSMART Circuit Monitoring, Sensor, 325A Dual-Feed, 8/8 Panel, Horizontal Inputs, Connectorized Outputs, Standard Tie Bar (Connectors purchased separately)	nrg300CB08-SENS-C
nrgSMART Circuit Monitoring, Controller, 325A Dual-Feed, 8/8 Panel, Vertical Inputs, Connectorized Outputs (Tie bar and connectors purchased separately	nrg300CB08-CTRL-SC
nrgSMART Circuit Monitoring, Sensor, 325A Dual-Feed, 8/8 Panel, Vertical Inputs, Connectorized Outputs (Tie bar and connectors purchased separately	nrg300CB08-SENS-SC
nrgILS Circuit Monitoring, 325A Dual-Feed, 8/8 Panel, Vertical Inputs, Output Terminal Blocks	nrgILS300CB08
nrgILS Circuit Monitoring, 325A Dual-Feed, 8/8 Panel, Horizontal Inputs, Connectorized Outputs, Standard Tie Bar (Connectors purchased separately)	nrgILS300CB08-C
Accessories (Purchased Separately):	**Part Number:**
1RU Circuit Breaker Puller	307491
Extra Blanking Covers (sheet of 16): to cover unused breaker positions (sheet of 16 included with panel)	149568
4 Post Mounting Bracket Kit: 22”-36” Brackets, Mounting Hardware (requires Tie Bar, -C Versions only)	307622
Tie Bar Kit: Connectorized, Rear Mount Tie Bar, Mounting Hardware (-SC Versions only)	307661
nrgSMART Temperature Sensor, ACC, 6ft	nrgTemp
I2C Temperature and Humidity Sensor, 6ft	nrgILSTEMP
I2C AC sensor	nrgILSAC

Amphenol Network Solutions
All rights reserved. 3.26.2025 149722-2 Rev A9
509.926.6000 — amphenol-ns.com.com

Replacement Components:	Part Number:
Replaceable Alarm Card	307608
Replaceable Alarm Card, nrgSMART	090-1000-0003
Replaceable Controller Card, nrgSMART	090-1000-0004
Replaceable Sensor Card, nrgSMART	090-1000-0005
19” Mounting Bracket Kit: 2x 19” Brackets, Mounting Hardware	PMTG19
23” Mounting Bracket Kit: 2x 23” Brackets, Mounting Hardware	PMTG23
Replacement LCD/Carrier Board with SOM	090-1000-0011
Replacement Config Board	090-1000-0012
Replacement – set of 16 Breaker covers	307794
Replacement nrgNET 5-pin connector (Term Block: RCPT, 1x5)	141431
Connectors (Purchased Separately):	**Part Number:**
P40 Connector Kit: TPA, 8-6 AWG, Plug, Retainer, 2X Contacts	150326
P40 Connector Kit: TPA, 12-10 AWG, Plug, Retainer, 2X Contacts	150325
P40 Replaceable Contact: 8-6 AWG, Single Contact	150333
P40 Replaceable Contact: 12-10 AWG, Single Contact	150334
Crimp Tool: 14-6 AWG, Daniels, M300BT	150793
Crimp Tool Locator: Universal, Daniels, UH2-5	150794
Contact Removal Tool: P40 Connector	150797
Custom made whips any color any gauge and any length: Call for more info.	

2.10.2 Circuit Breakers

Single-Pole Breakers:	Part Number:
2A, standard delay, UL489	151723
3A, standard delay, UL489	152805
5A, standard delay, UL489	149710
10A, standard delay, UL489	149711
15A, standard delay, UL489	149712
20A, standard delay, UL489	149713
25A, standard delay, UL489	149714
30A, standard delay, UL489	149715
40A, standard delay, UL489	149716
50A, standard delay, UL489	149718
60A, standard delay, UL489	149719

Amphenol Network Solutions
All rights reserved. 3.26.2025 149722-2 Rev A9
509.926.6000 — amphenol-ns.com.com

ALERT

ALERT! Only use components and crimping tools approved by agencies or certifying bodies recognized in your country or region such as Underwriter's Laboratories (UL), TUV, etc.

2.10.3 Lug Reference Guide

Input Cables: 2 Hole $^{3}/_{8}$" on 1" Centers Max. Width 1.15"					
	350MCM	**250MCM**	**4/0**	**3/0**	**2/0**
T&B	—	54213	54212	54211	54210
Panduit	—	—	LCD4/0-38D-X	LCD3/0-38D-X	LCD2/0-38D-X
Burndy	YA34L2NT38FX	YA29L-2TC38	YA28L-2TC38	YA27L-2TC38	YA26L-2TC38

Output Cables: 1 Hole 10-32 Max. Width .50"				
	#4	**#6**	**#8**	**#10-14**
T&B	54138NT*	54134	54104	—
Panduit	LCAN4-10-L*	LCA6-10-L	LCA8-10-L	LCA10-10-L
Burndy	YA4CL1-BOX	YA6CL1-BOX	YA8CL-BOX	YAV10-BOX

*Narrow tongue lug

Ground Cables: 2 Hole $^{1}/_{4}$" on $^{5}/_{8}$" Centers			
	#1	**#2**	**#4**
T&B	54208	54207	54206
Panduit	LCD1-14A-E	LCD2-14A-Q	LCD4-14A-L
Burndy	YA1CL-2TC14	YA2CL-2TC14	YA4CL-2TC14

Amphenol Network Solutions
All rights reserved. 3.26.2025 149722-2 Rev A9
509.926.6000 — amphenol-ns.com.com

Section Three: Drawings

3.1 300CB08 Drawings

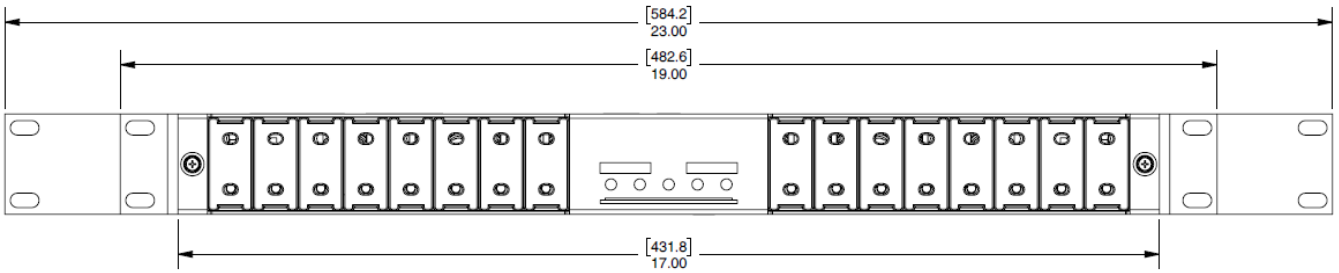

Fig. 3-1: Front View (Passive Versions)

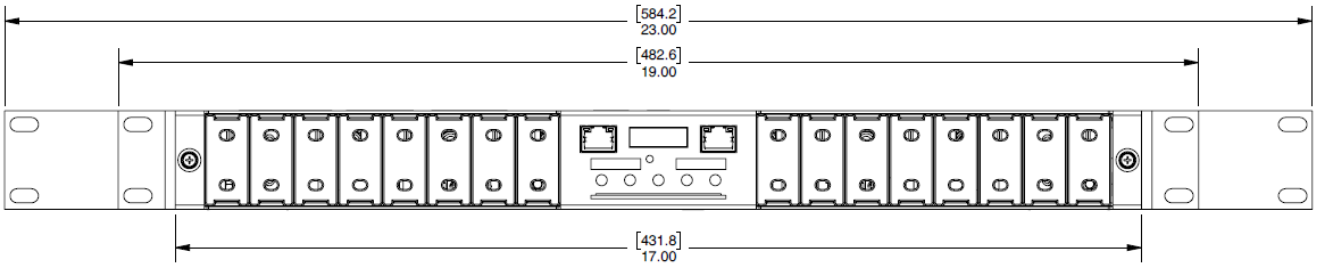

Fig. 3-2: Front View (nrgSMART -CTRL and nrgILS Versions)

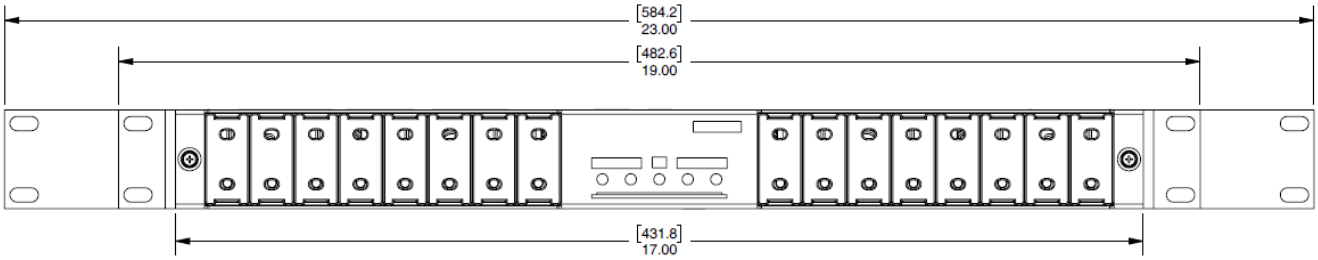

Fig. 3-3: Front View (nrgSMART -SENS Versions)

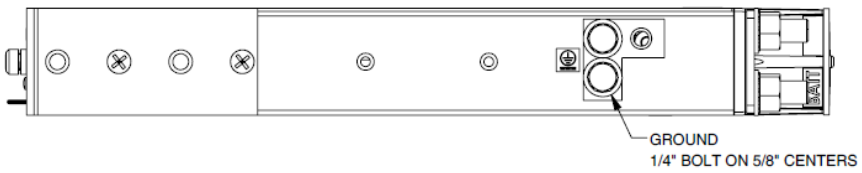

Fig. 3-4: Side View (Standard and -SC Versions)

Amphenol Network Solutions
All rights reserved. 3.26.2025 149722-2 Rev A9
509.926.6000 — amphenol-ns.com.com

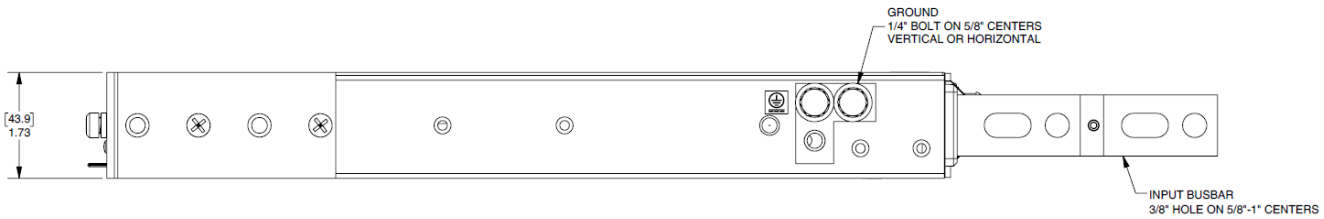

Fig. 3-5: Side View (-C Versions)

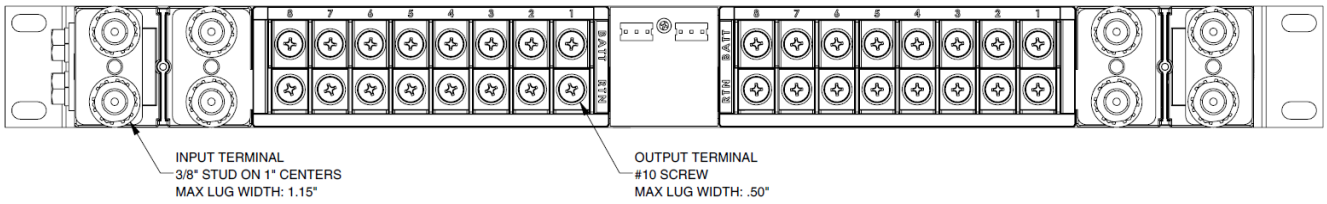

Fig. 3-6: Rear View (300CB08)

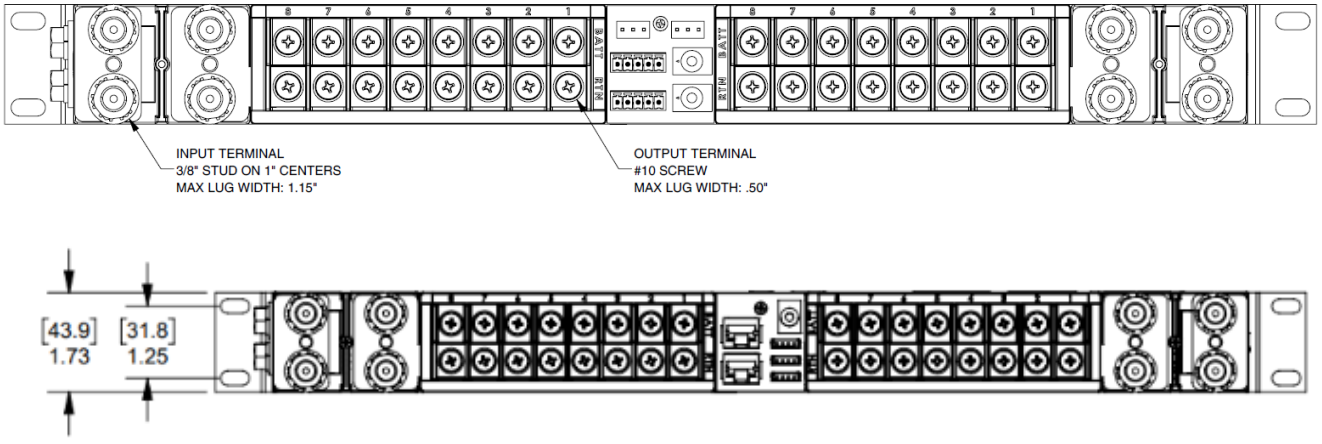

Fig. 3-7: Rear View (nrg300CB08-CTRL, nrg300CB08-SENS and nrgILS 300CB08)

Amphenol Network Solutions
All rights reserved. 3.26.2025 149722-2 Rev A9
509.926.6000 — amphenol-ns.com.com

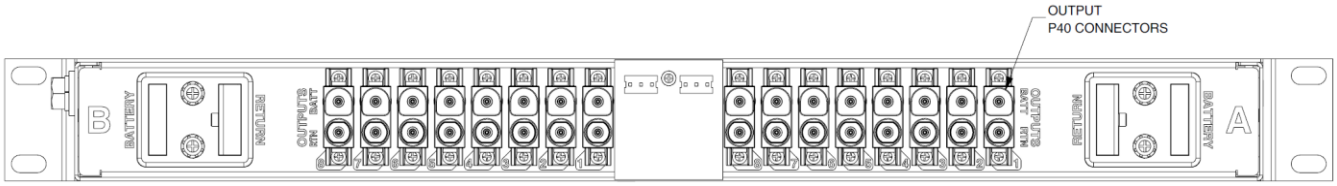

Fig. 3-8: Rear view (300CB08-C)

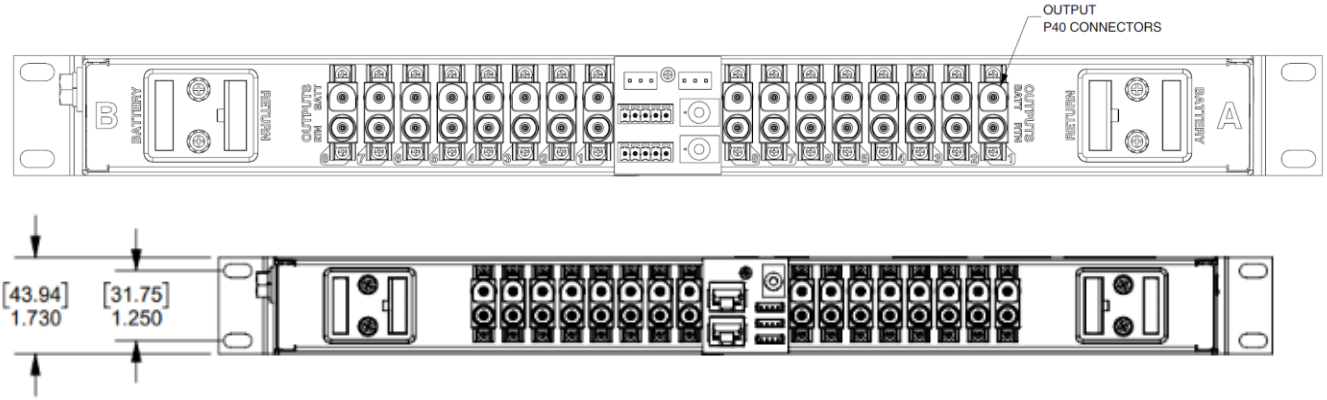

Fig. 3-9: Rear View (nrg300CB08-CTRL-C, nrg300CB08-SENS-C and nrgILS300CB08-C)

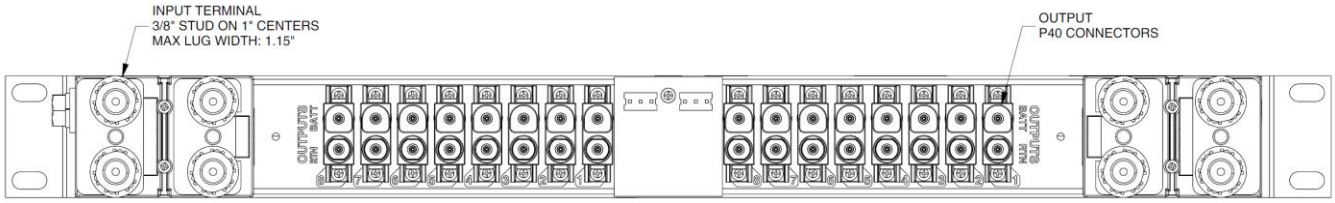

Fig. 3-10: Rear View (300CB08-SC)

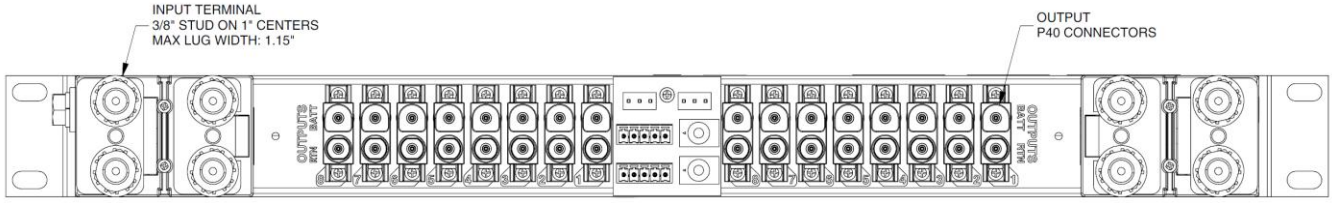

Fig. 3-11: Rear View (nrg300CB08-CTRL-SC and nrg300CB08-SENS-SC)

Amphenol Network Solutions
All rights reserved. 3.26.2025 149722-2 Rev A9
509.926.6000 — amphenol-ns.com.com

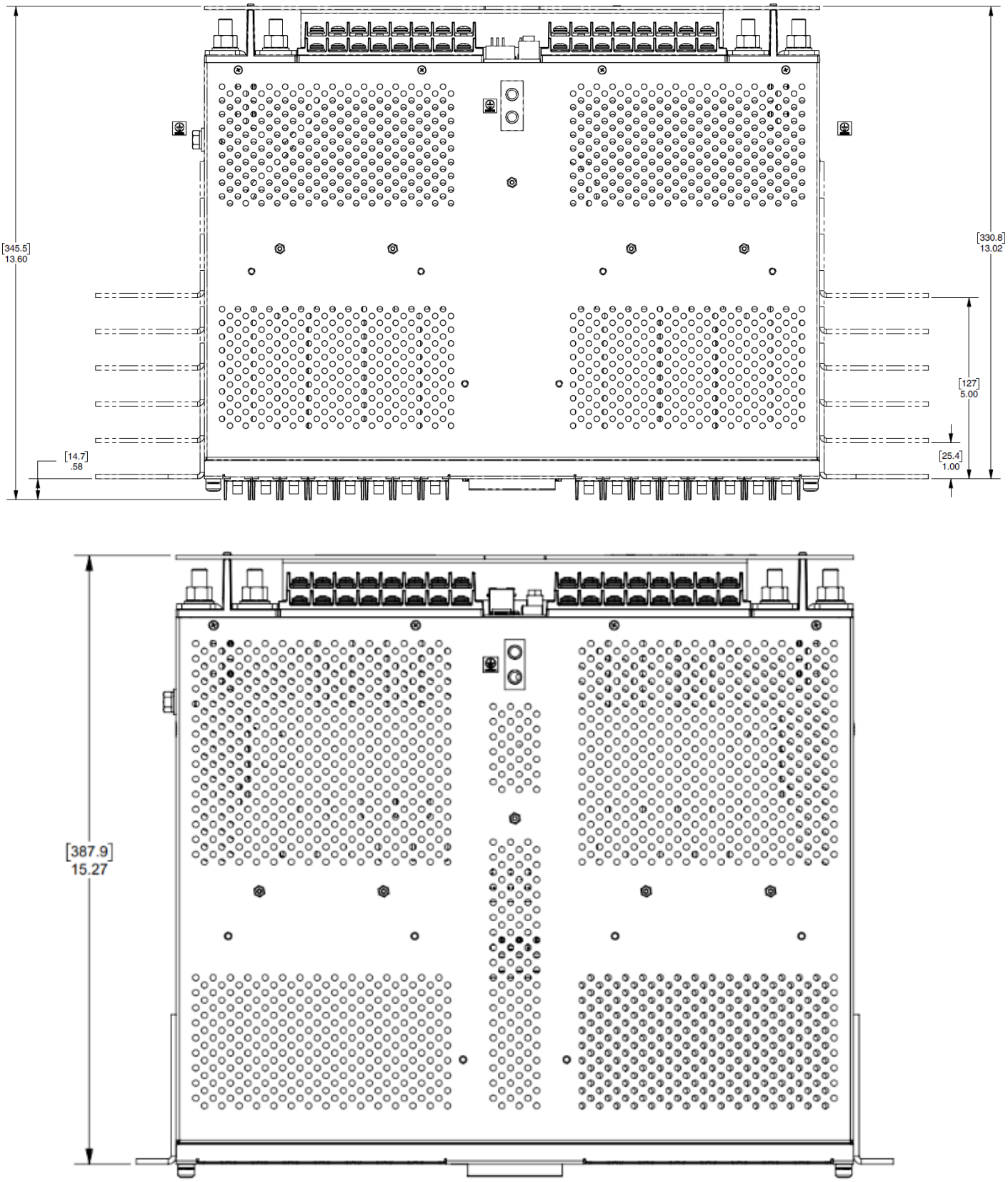

Fig. 3-12: Bottom View Standard (TOP) nrgILS300CB08 (Bottom)

Amphenol Network Solutions
All rights reserved. 3.26.2025 149722-2 Rev A9
509.926.6000 — amphenol-ns.com.com

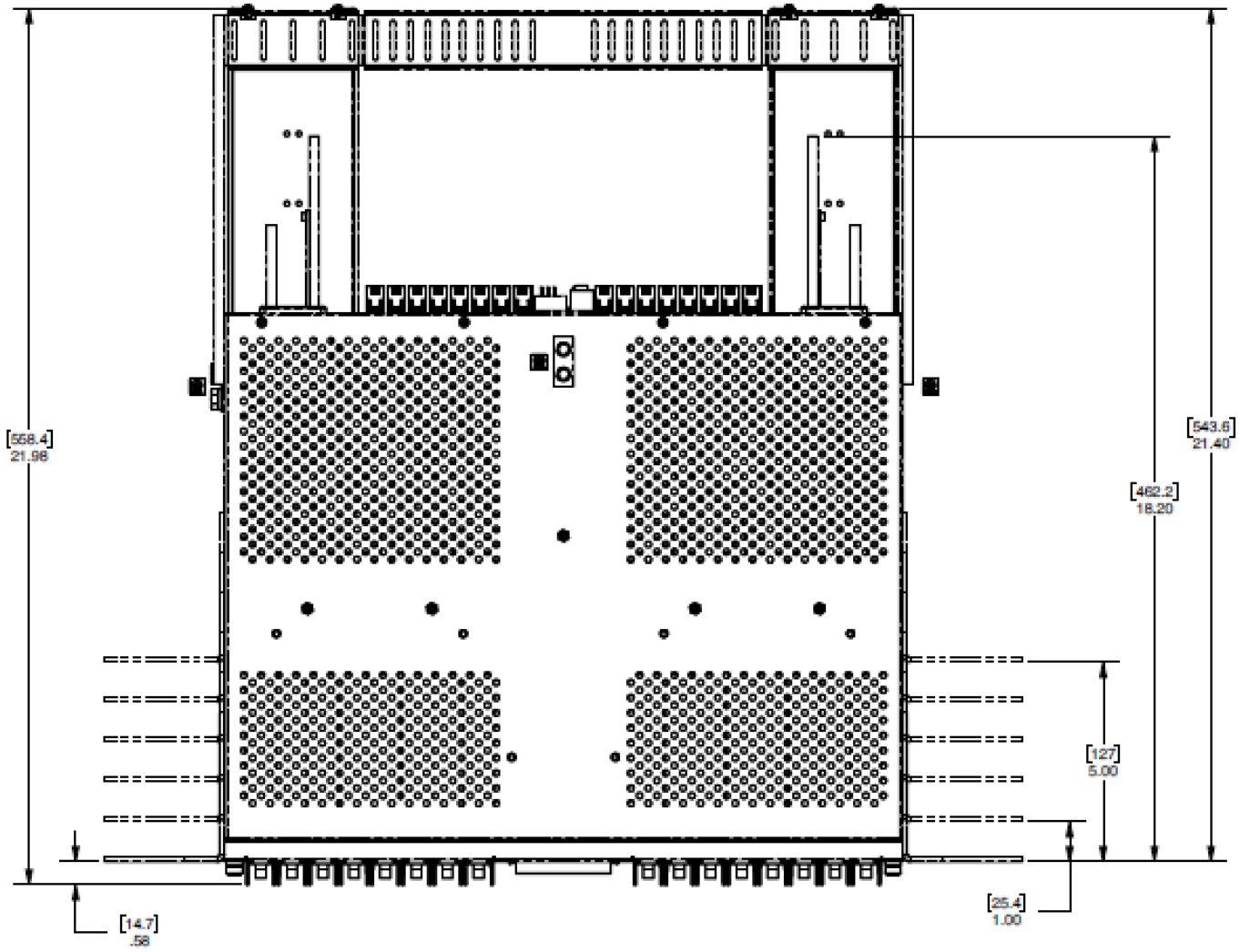

Amphenol Network Solutions
All rights reserved. 3.26.2025 149722-2 Rev A9
509.926.6000 — amphenol-ns.com.com

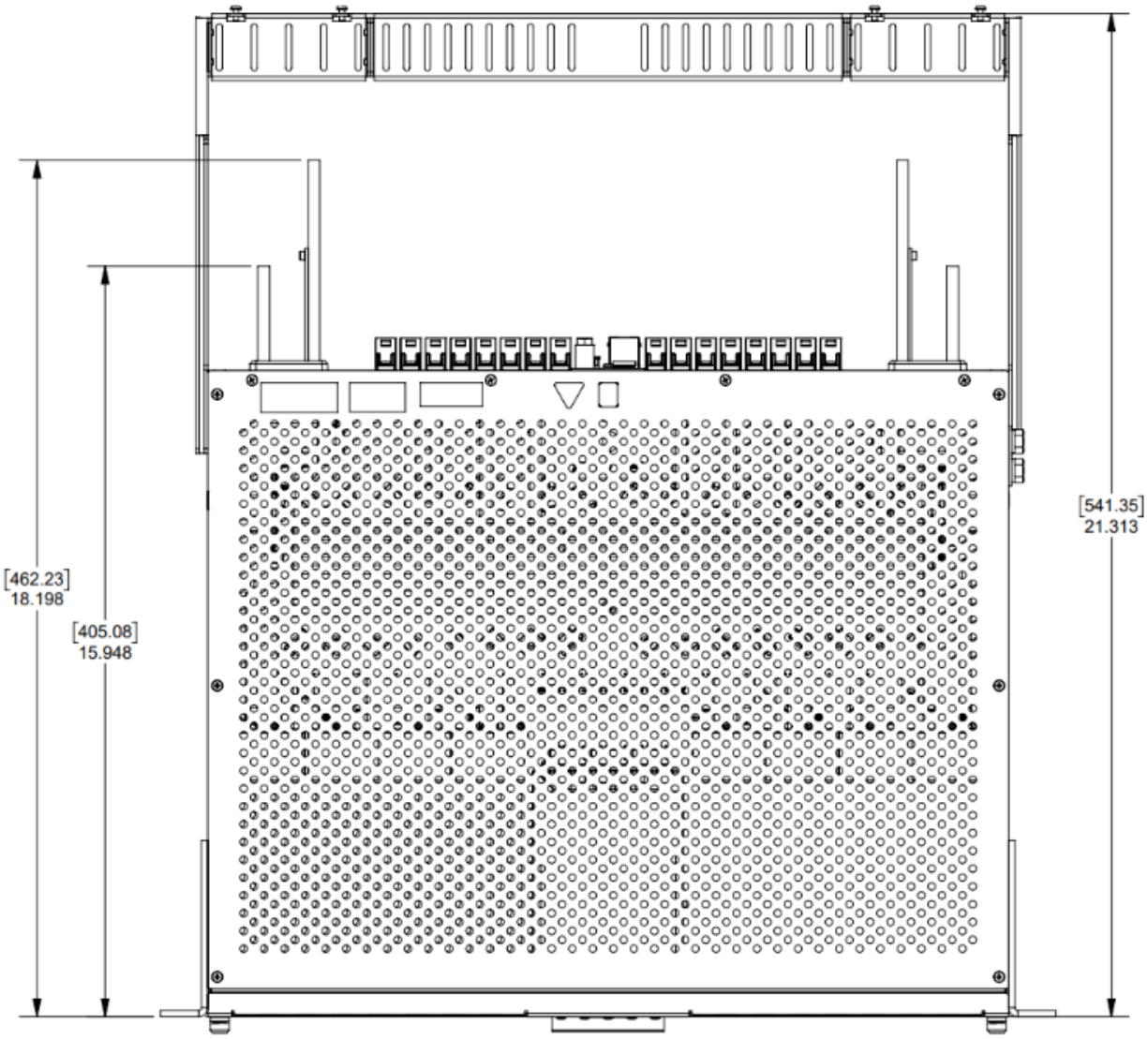

Fig. 3-13: Bottom View -C Version (TOP) nrgILS300CB08 (Bottom)

Amphenol Network Solutions
All rights reserved. 3.26.2025 149722-2 Rev A9
509.926.6000 — amphenol-ns.com.com

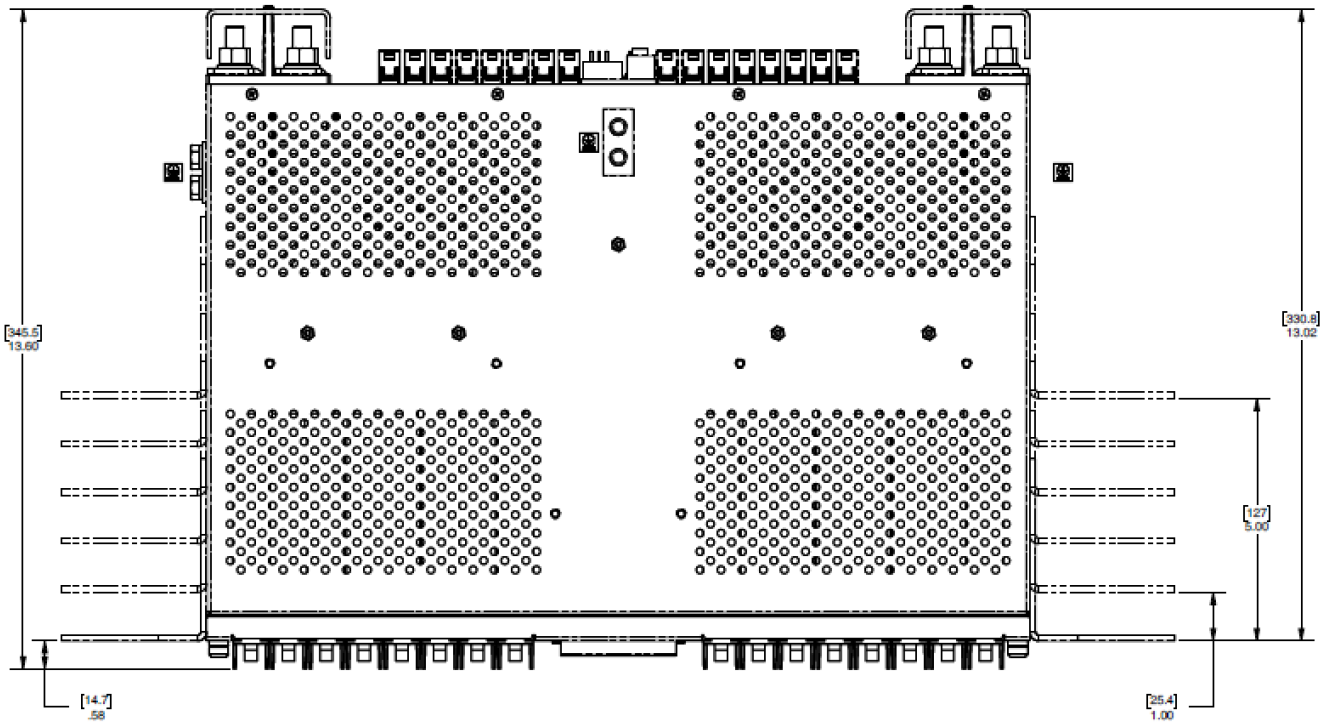

Fig. 3-14: Bottom View (-SC Versions)

Amphenol Network Solutions
All rights reserved. 3.26.2025 149722-2 Rev A9
509.926.6000 — amphenol-ns.com.com

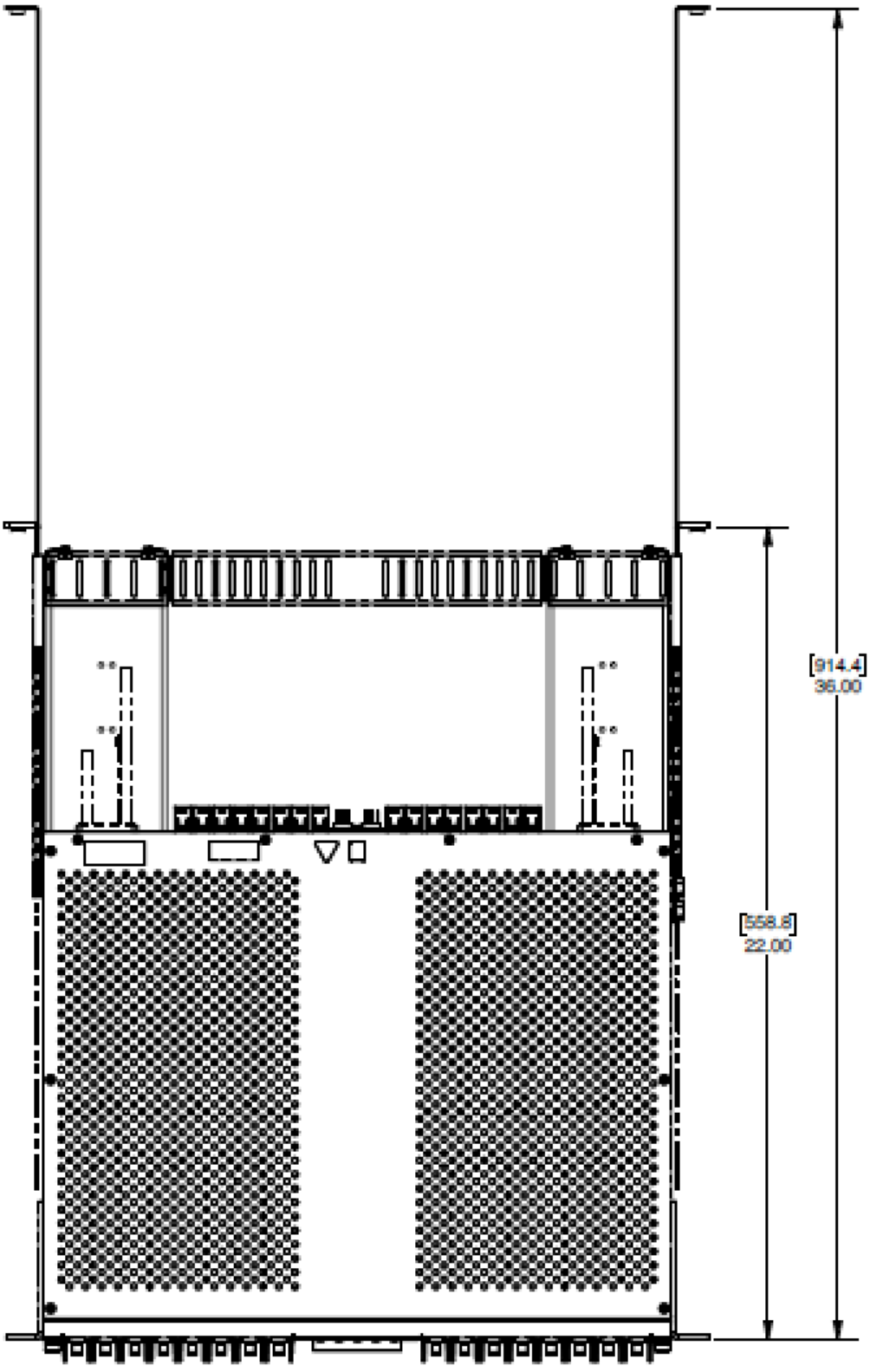

Fig. 3-15: Optional 4 Post Mounting Bracket (-C Versions)

Amphenol Network Solutions
All rights reserved. 3.26.2025 149722-2 Rev A9
509.926.6000 — amphenol-ns.com.com

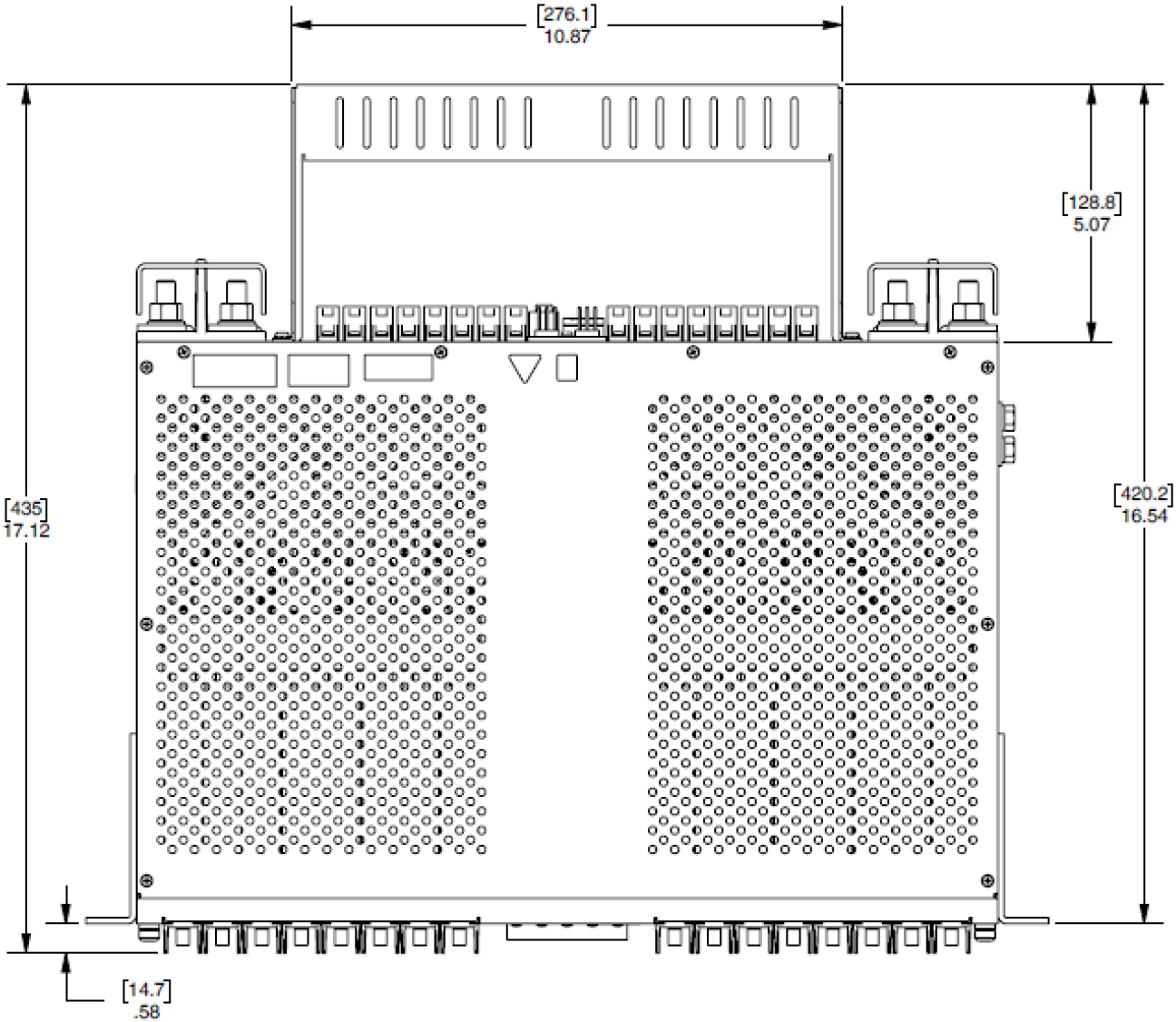

Fig. 3-16: Optional Tie Bar (-SC Versions)

Amphenol Network Solutions
All rights reserved. 3.26.2025 149722-2 Rev A9
509.926.6000 — amphenol-ns.com.com

Section Four: Notices (nrgSMART Versions)

4.1 FCC Class A Notice

This device complies with part 15 of the FCC Rules. Operation is subject to the following two conditions:

1. **This device may not cause harmful interference**
2. **This device must accept any interference received, including interference that may cause undesired operation.**

NOTE: This equipment has been tested and found to comply with limits for Class A digital device, pursuant to part 15 of the FCC Rules. These limits are designed to provide a reasonable protection against harmful interference when the equipment is operated in a commercial environment. This equipment generates, uses and can radiate radio frequency energy and, if not installed and used in accordance with the instruction manual, may cause harmful interference to radio communications. Operation of this equipment in a residential area is likely to cause harmful interference in which case the user will be required to correct the interference at his own expense.

Modification

Any modifications made to this device that are not approved by Amphenol Network Solutions may void the authority granted to the user by the FCC to operate this equipment.

4.2 ICES-003 Class A Notice – Avis NMB-003, Class A

This Class A digital apparatus complies with Canadian ICES-003.

Cet appareil numérique de la classe A est conforme à la norme NMB-003 du Canada.



ELECTROSTATIC DISCHARGE (ESD) PRECAUTIONS

ELECTROSTATIC DISCHARGE (ESD) PRECAUTIONS! When handling any electronic component or assembly you must observe the following antistatic precautions to prevent damage. Always disconnect power from the server and wear a grounded wrist strap when working around the Controller. Always wear a grounded wrist strap when handling printed circuit boards.
Treat all assemblies, components and interface connections as static-sensitive.

Amphenol Network Solutions
All rights reserved. 3.26.2025 149722-2 Rev A9
509.926.6000 — amphenol-ns.com.com